Fixture Design

ITCD – 301-001

Fixtures

- A fixture is a means through which a part is securely fastened to the machine tool table to accurately locate, support and hold the part during the machining operation.
- In addition to the function of holding the work piece, the fixtures also provide for setting the cutting tool for the actual machining operation.
- Generally a fixture is supposed to be securely fastened to the machine tool table.

Fixtures

- Fixtures are widely used in large batch production to ensure the easy setup and achieving the desired accuracy.
- It can be used in a variety of machine tools such as Lathe, milling, grinding, etc. though the milling fixtures are the most widely used in view of the complex requirements for the milling operation.

Referencing the tool to the work

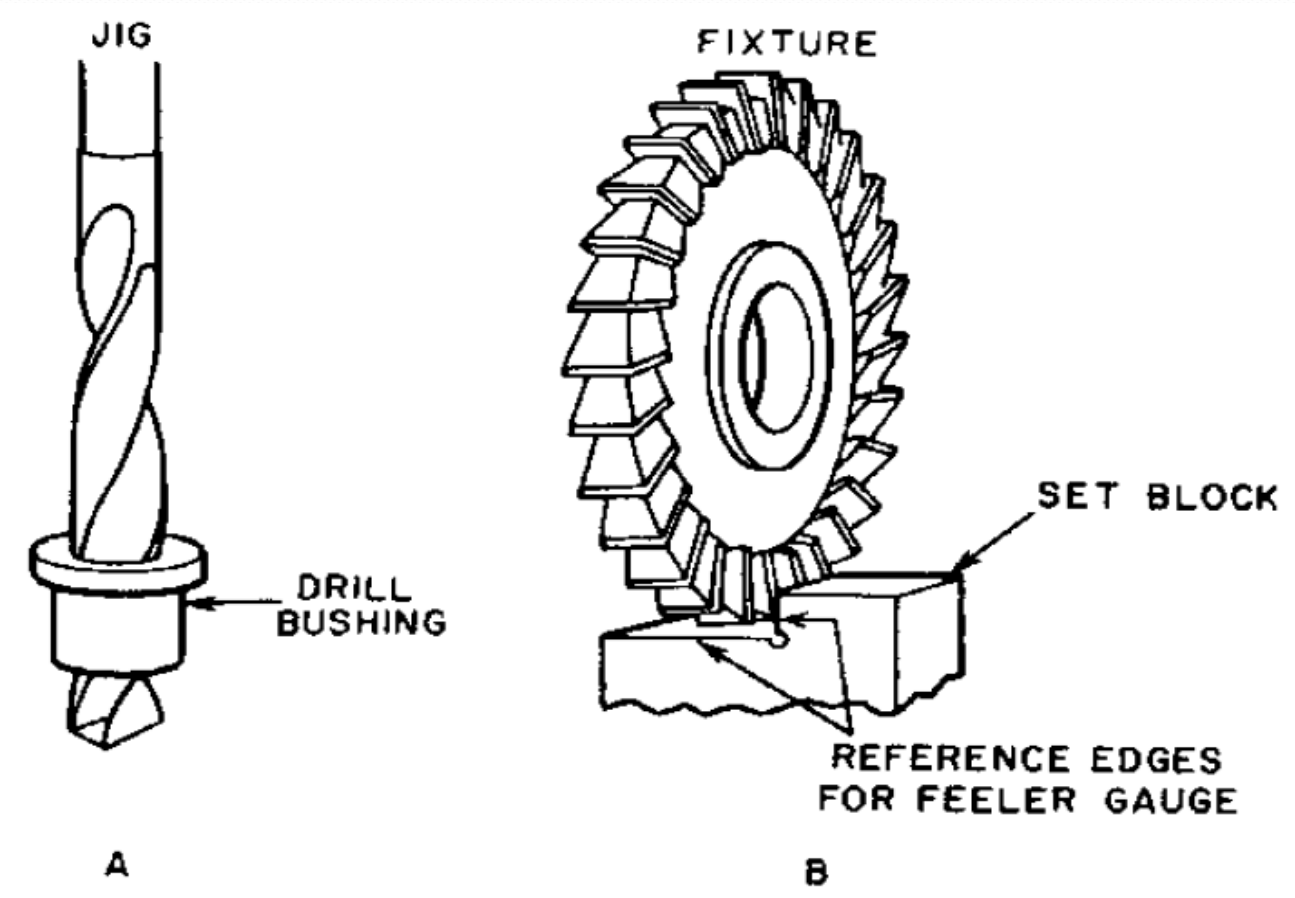

Milling fixture showing method of setting cutter

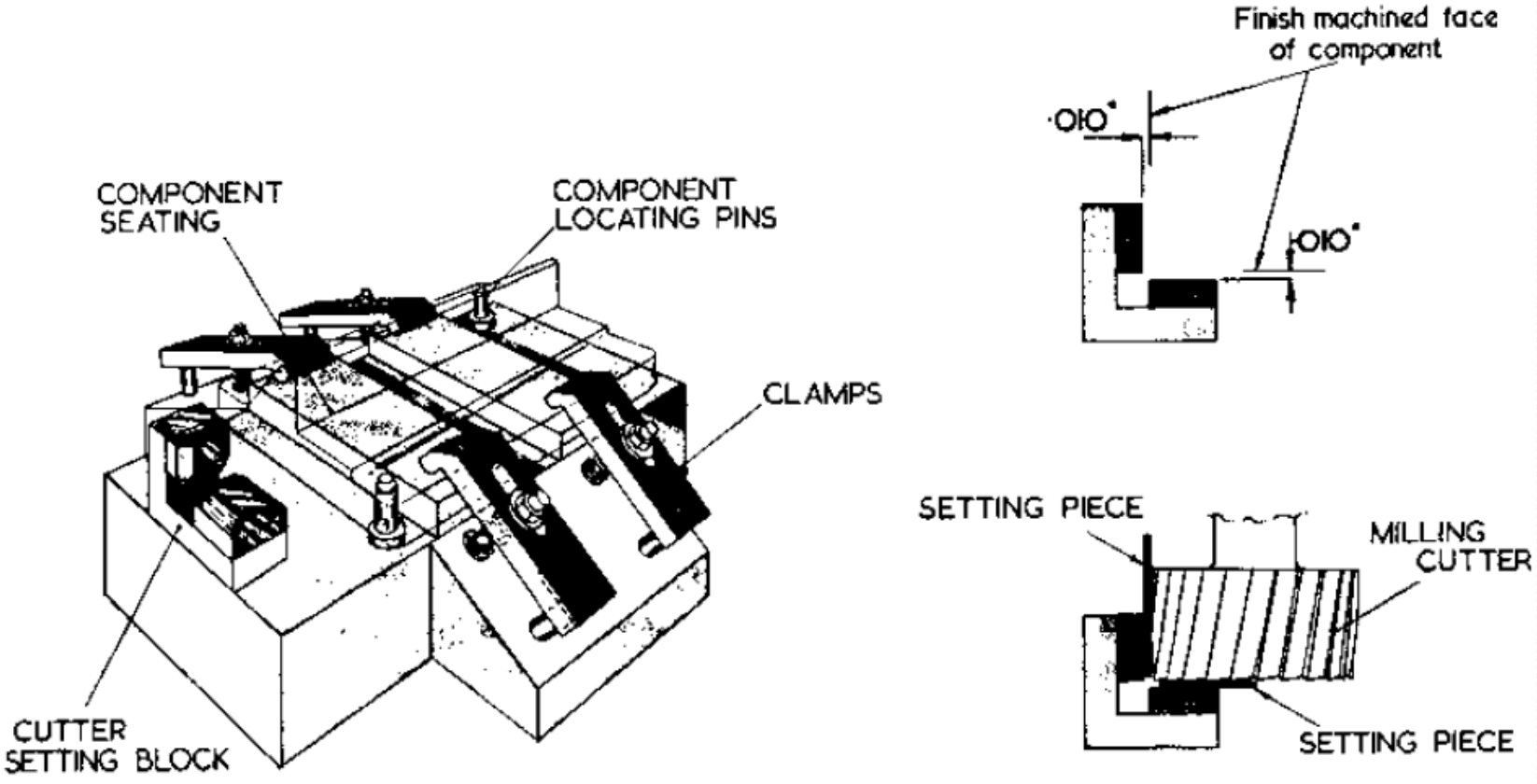

Typical fixture used for milling a flat

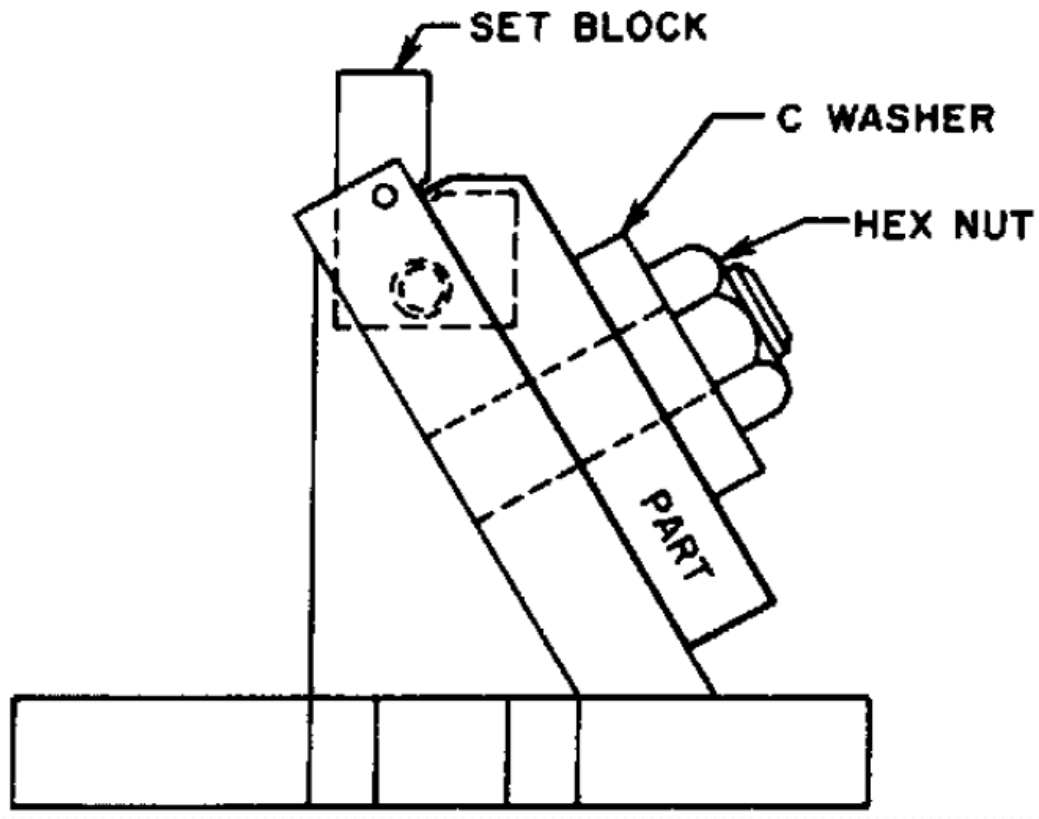

Typical fixture used for milling a flat

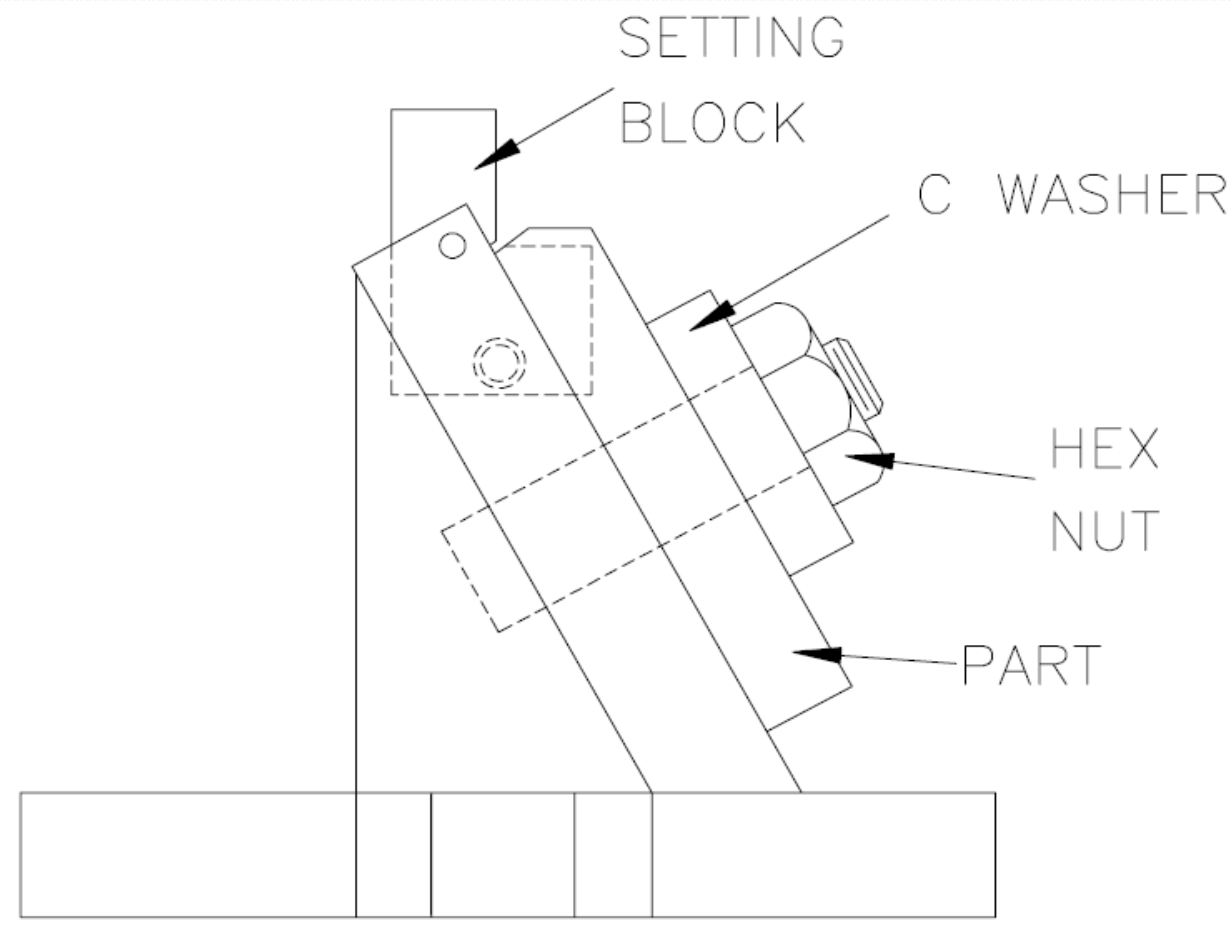

Fixtures are named on the machine tool in which it is being used

Assembly	Boring
Broaching	Grinding
Heat treating	Honing
Inspection	Lapping
Milling	Turning
Welding	

Machine Considerations

- Physical characteristics of workpiece
  - Round
  - Irregular
  - Large
  - small
- Types of motions
  - Linear
  - Rotary

Machining a valve body

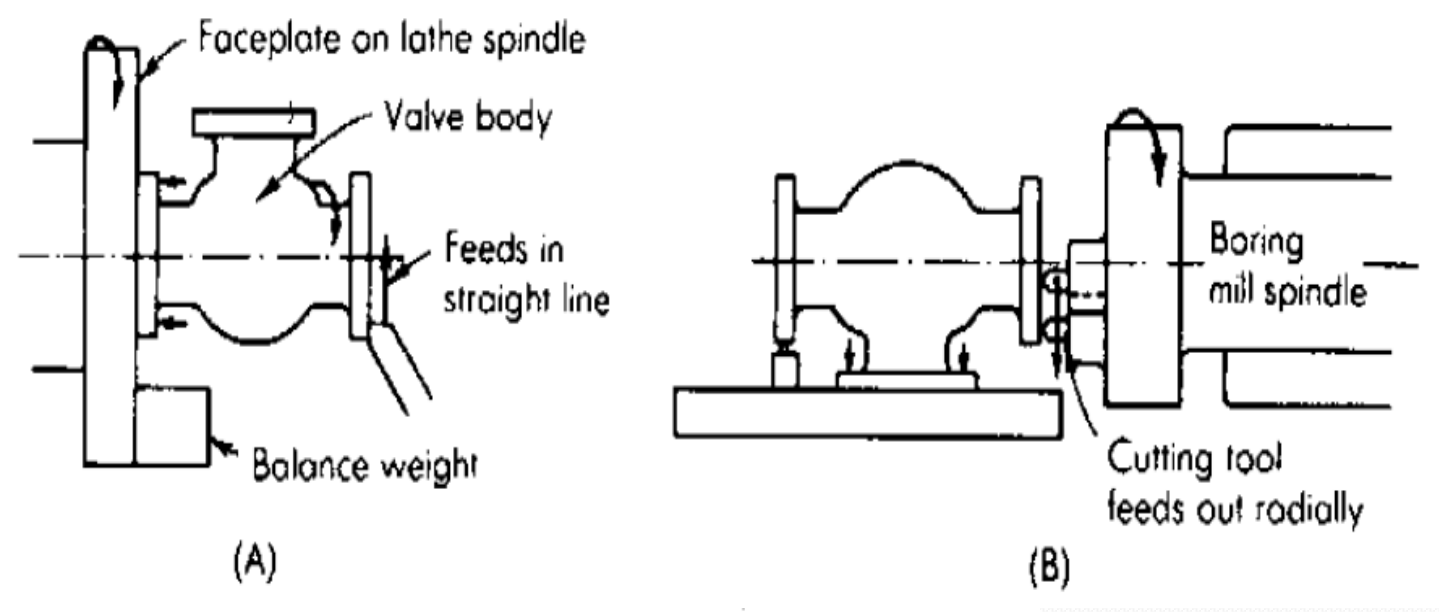

Machining a valve body by either (*A*) workpiece rotation or (*B*) tool rotation.

Process Considerations

- Direction of the cutting forces

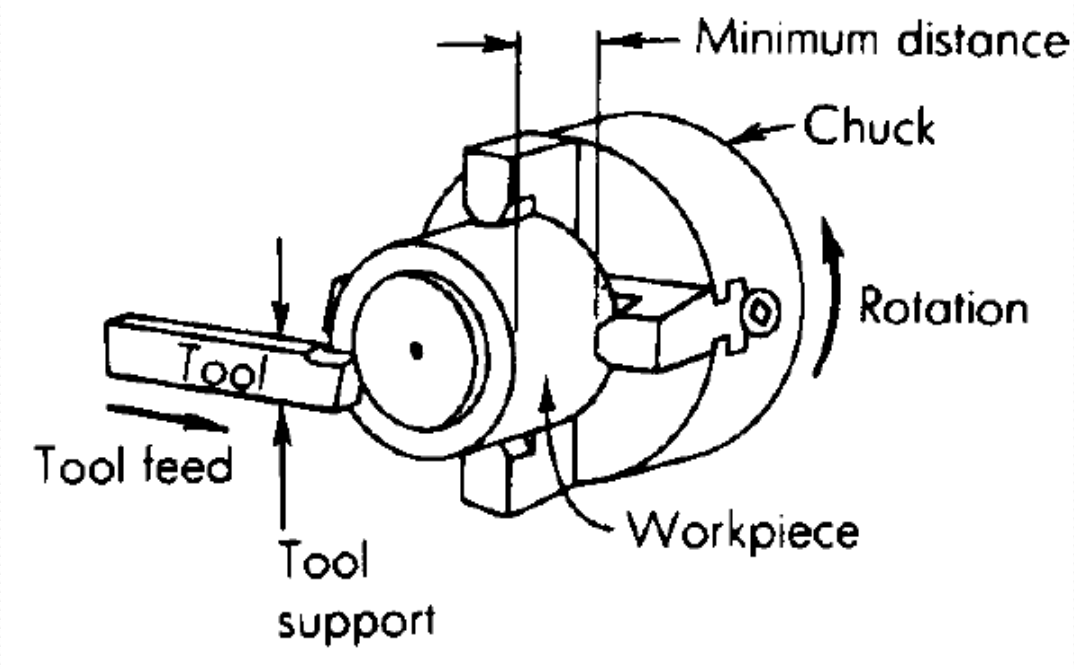

Minimizing cutting force by applying holding force as near as possible to point of tool application.

Steady rest used to support workpiece in area of cutting-force application

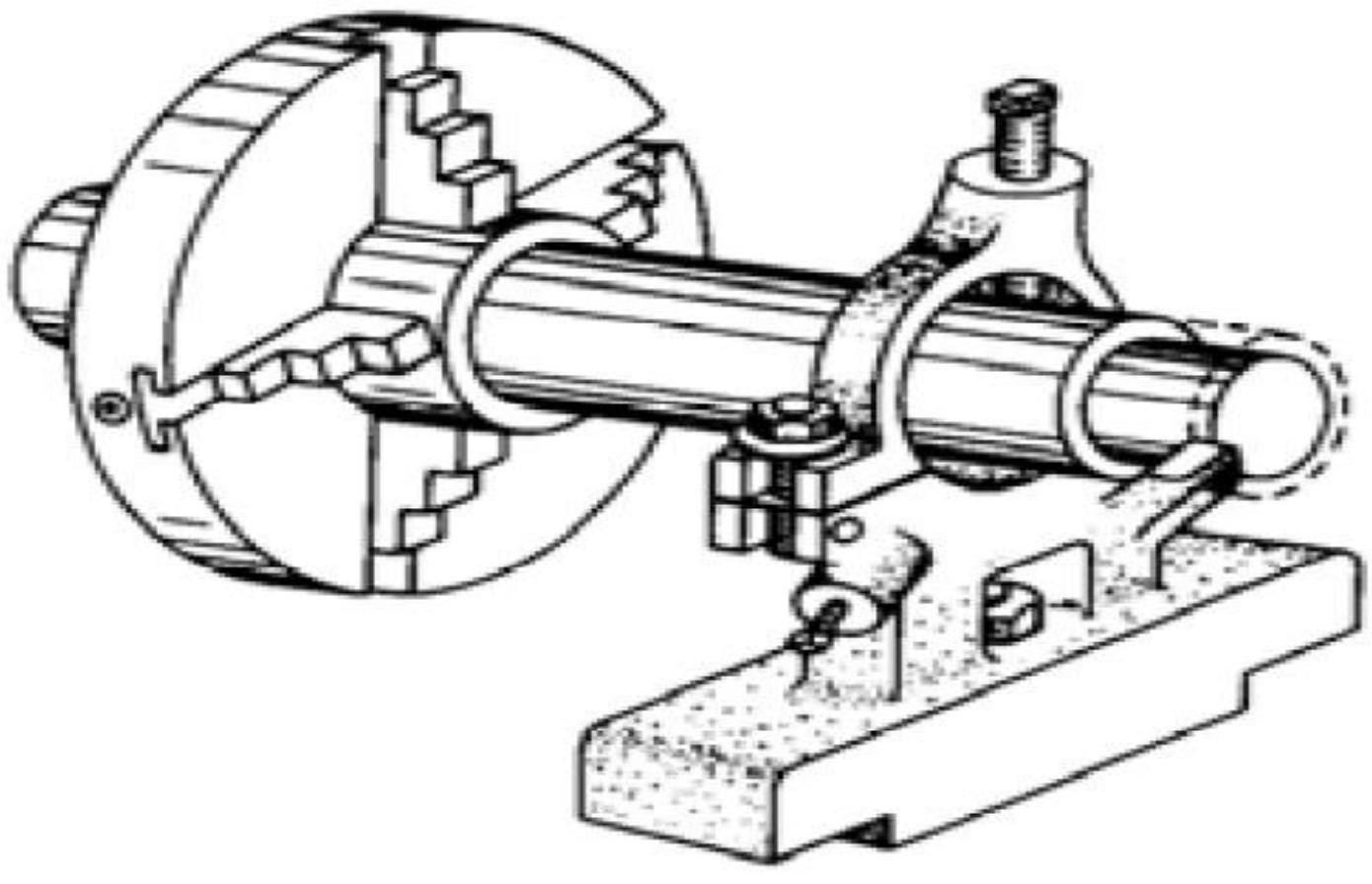

Steady rest and center used to support workpiece in area of cutting-force application

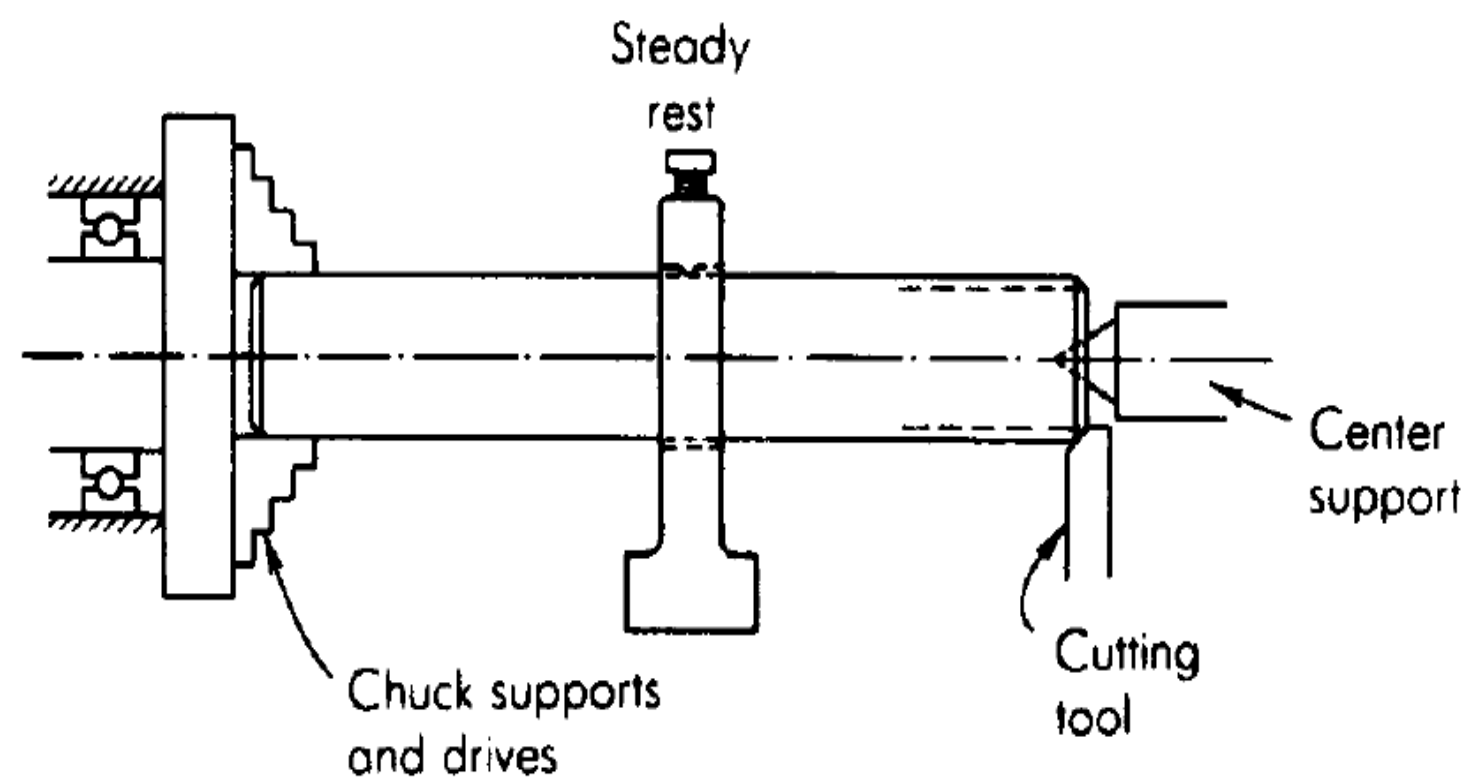

Types of fixtures

- Plate fixtures
- Angle plate fixtures
- Vise jaw fixtures
- Indexing fixtures
- Multipart fixtures

Plate fixtures

- From a plate by adding locators and clamps
- Reference surface is parallel to the mounting surface

Plate fixtures

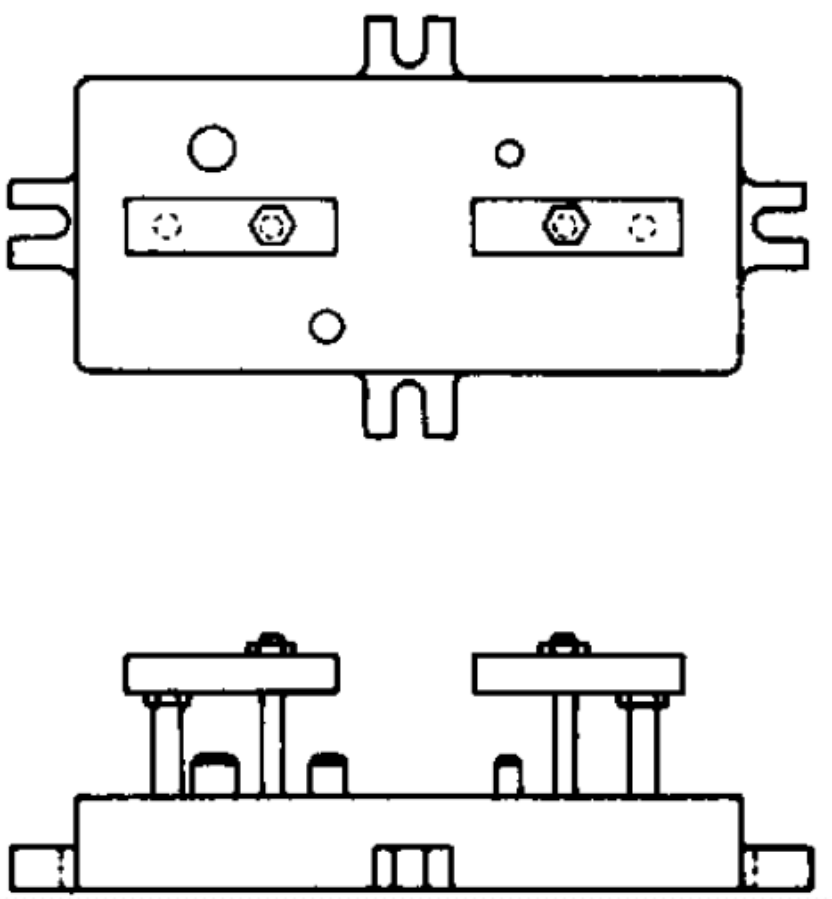

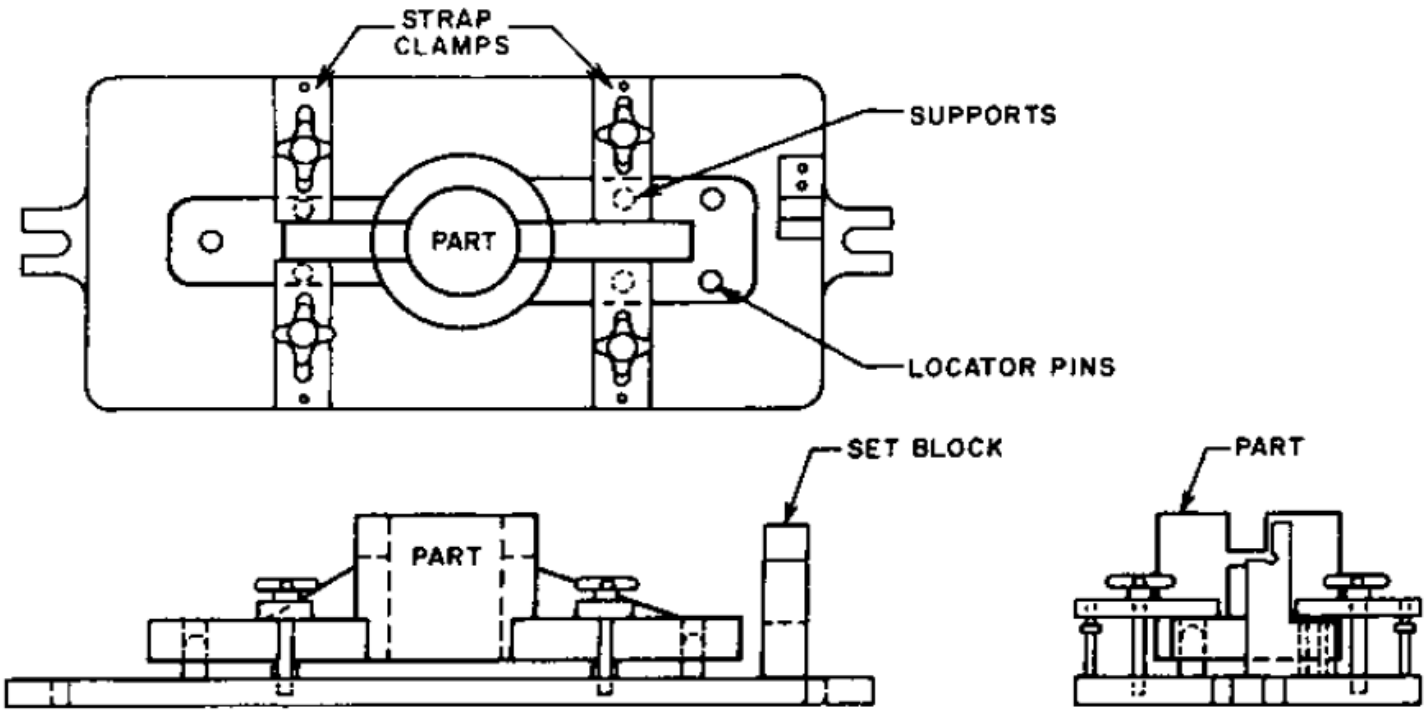

Plate fixture

Fig. From Donaldson, and Lecain, Tool Design, McGraw Hill

Angle plate fixtures

- Modified form of plate fixture
- Reference surface is perpendicular to the mounting surface

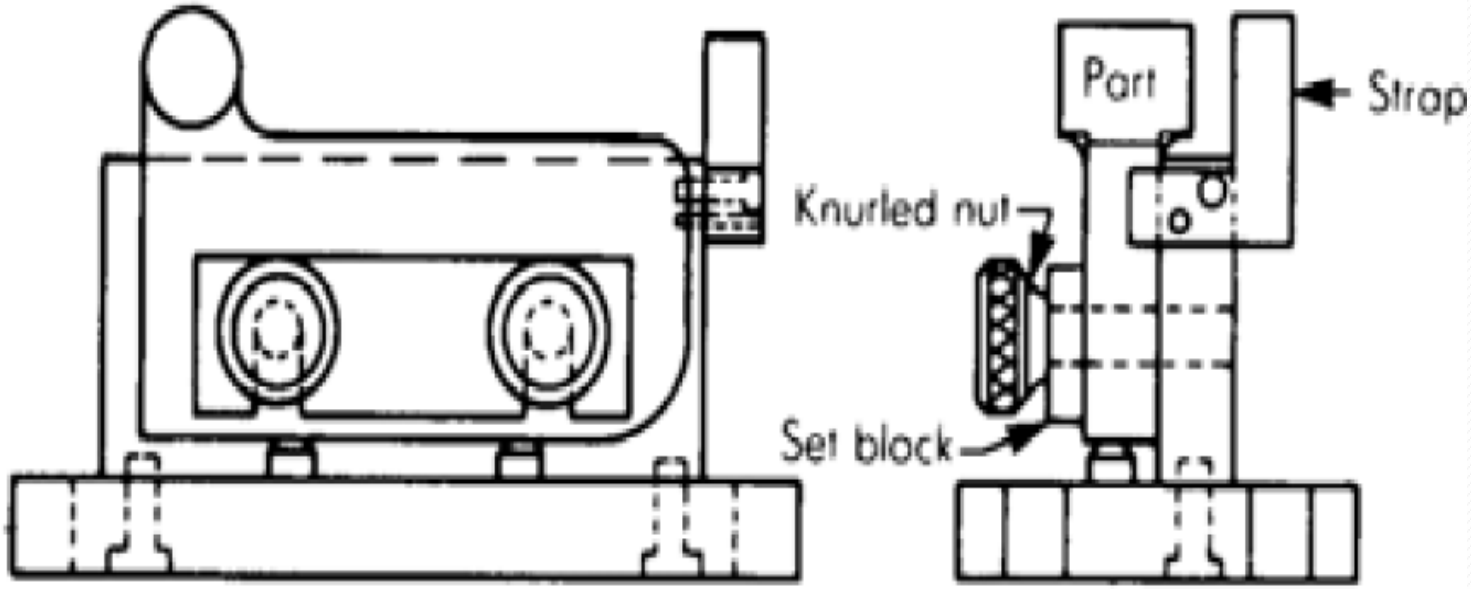

Modified angle plate fixture

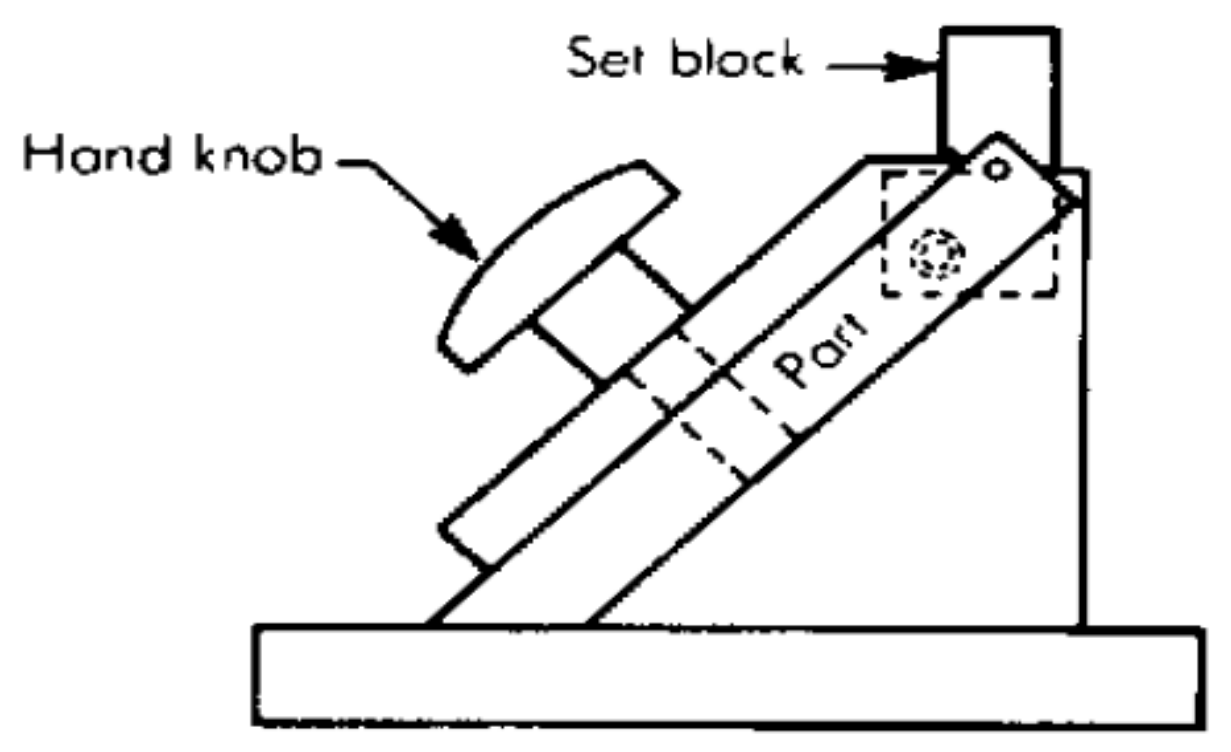

Vise jaw fixture

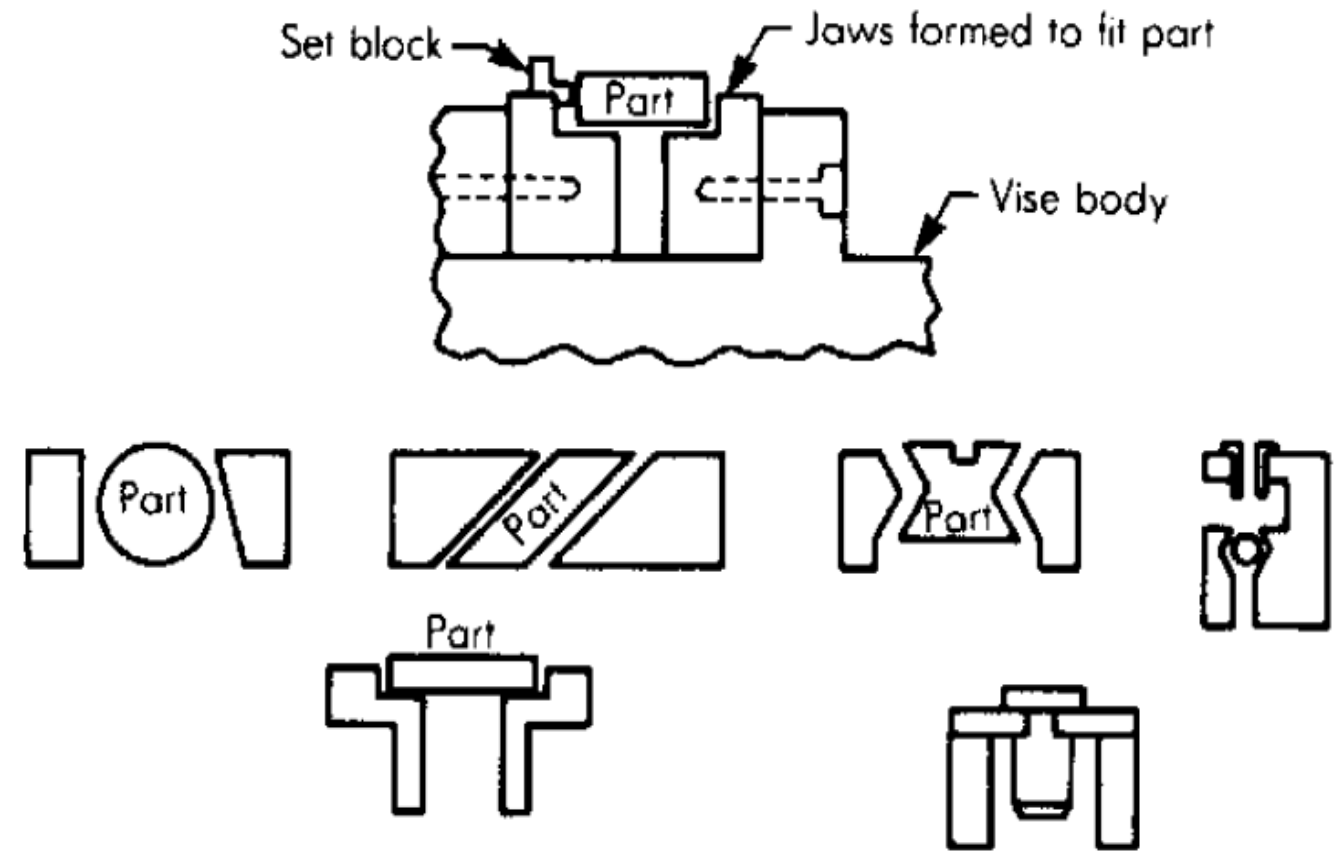

Indexing fixture

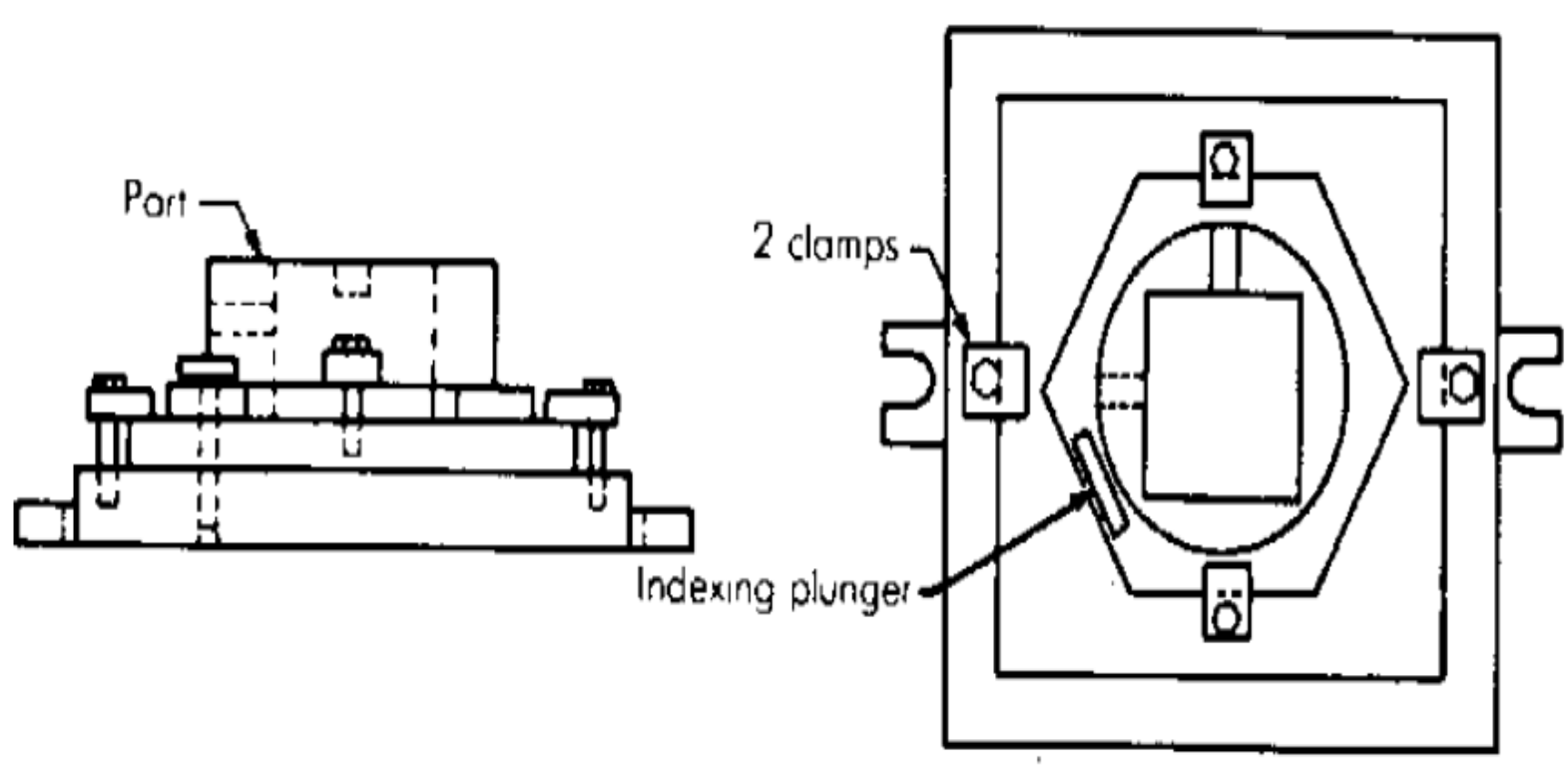

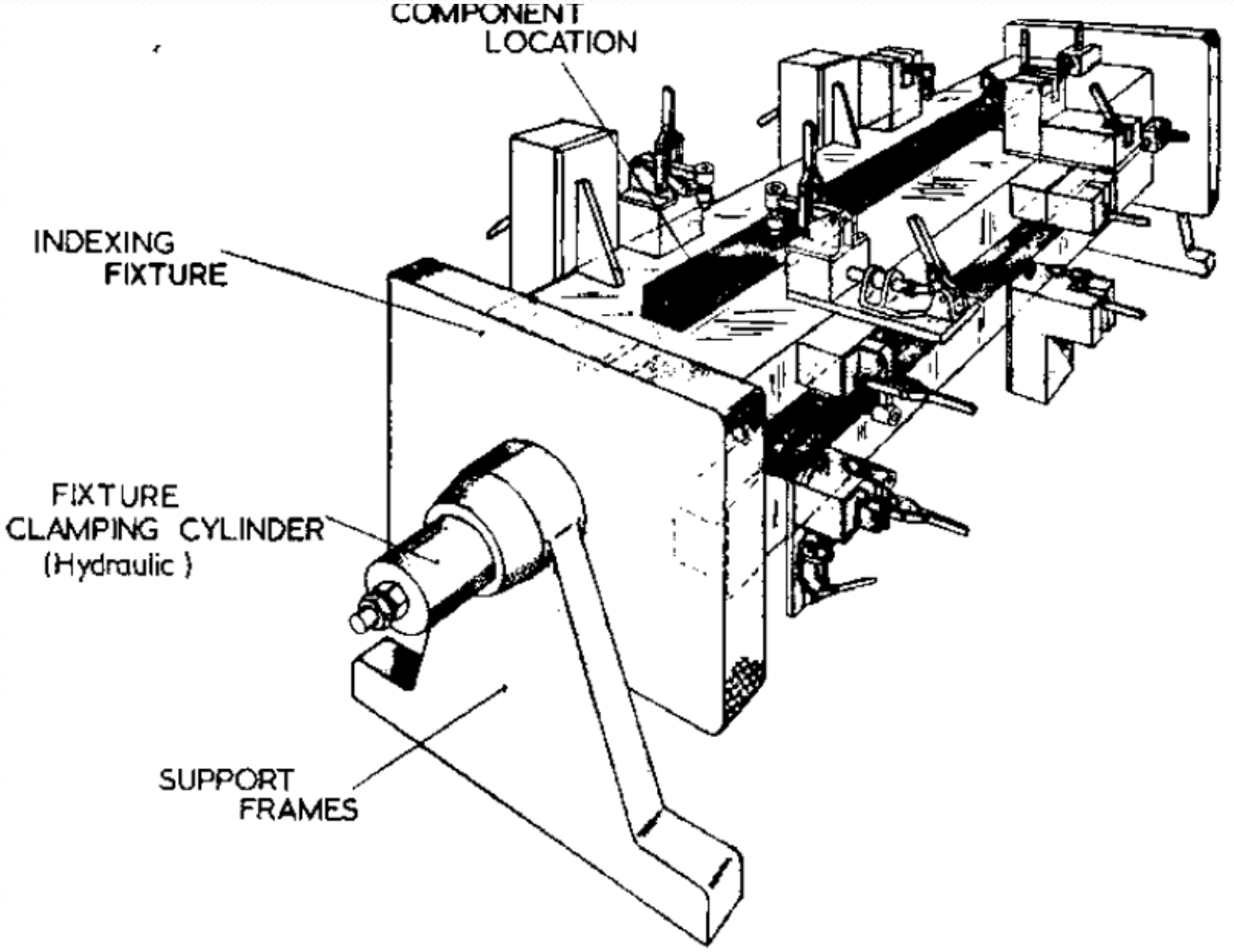
COMPONENT
LOCATION
INDEXING
FIXTURE
FIXTURE
CLAMPING CYLINDER
(Hydraulic)
SUPPORT
FRAMES

Multistation fixture

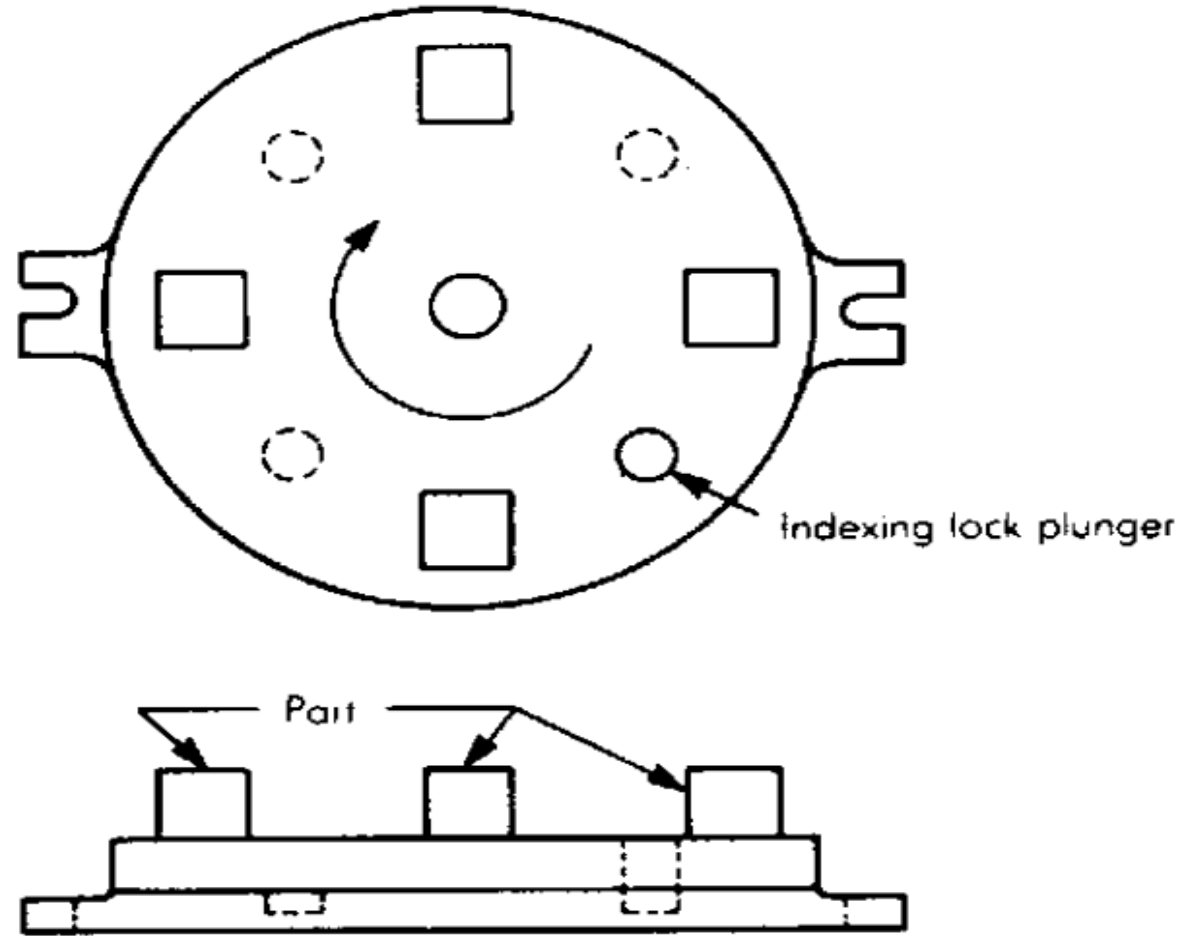

Multi-part or multistation fixture

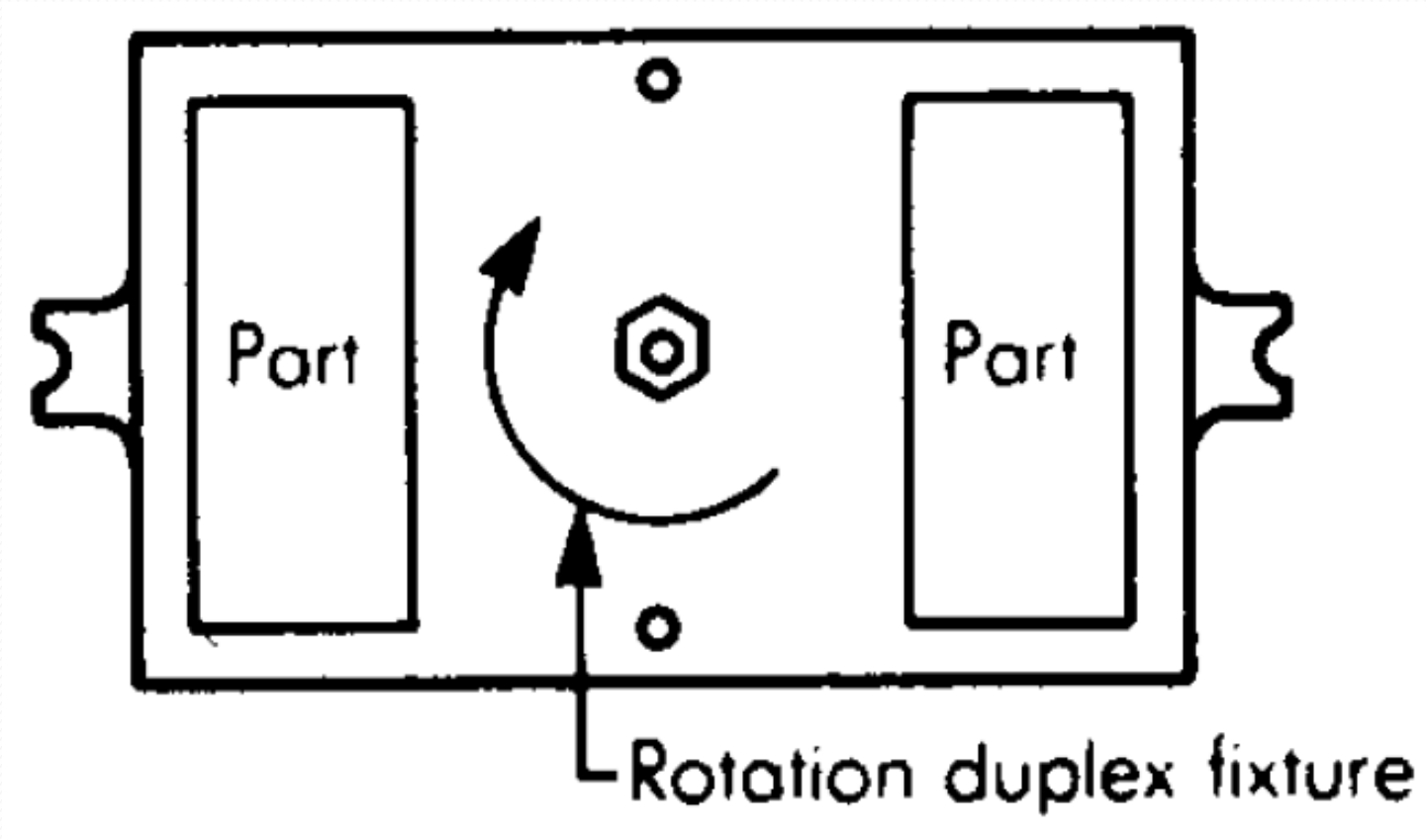

Milling fixtures

- Milling fixtures are the most common type of fixture in general use today.
- The simplest type of milling fixture is a milling vise mounted on the machine table.
- However, as the work piece size, shape, or complexity becomes more sophisticated, so too must the fixture.

Milling fixtures

- The design should permit as many surfaces of the part to be machined as possible. without removing the part.
- Whenever possible, the tool should be changed to suit the part. Moving the part to accommodate one cutter for several operations is not as accurate or as efficient as changing cutters.

Milling fixtures

- Locators must be designed to resist all tool forces and thrusts. Clamps should not be used to resist tool forces.
- Clearance space or sufficient room must be allotted to provide adequate space to change cutters or to load and unload the part.
- Milling fixtures should be designed and built with a low profile to prevent unnecessary twisting or springing while in operation.

Milling fixtures

- The entire workpiece must be located within the area of support of the fixture. In those cases where this is either impossible or impractical, additional supports, or jacks, must be provided.
- Chip removal and coolant drainage must be considered in the design of the fixture. Sufficient space should be permitted to allow the chips to be easily removed with a brush.
- Set blocks or cutter setting gages must be provided in the fixture design to aid the operator in properly setting up the tool in production.

Use of gage block in setting up a milling operation

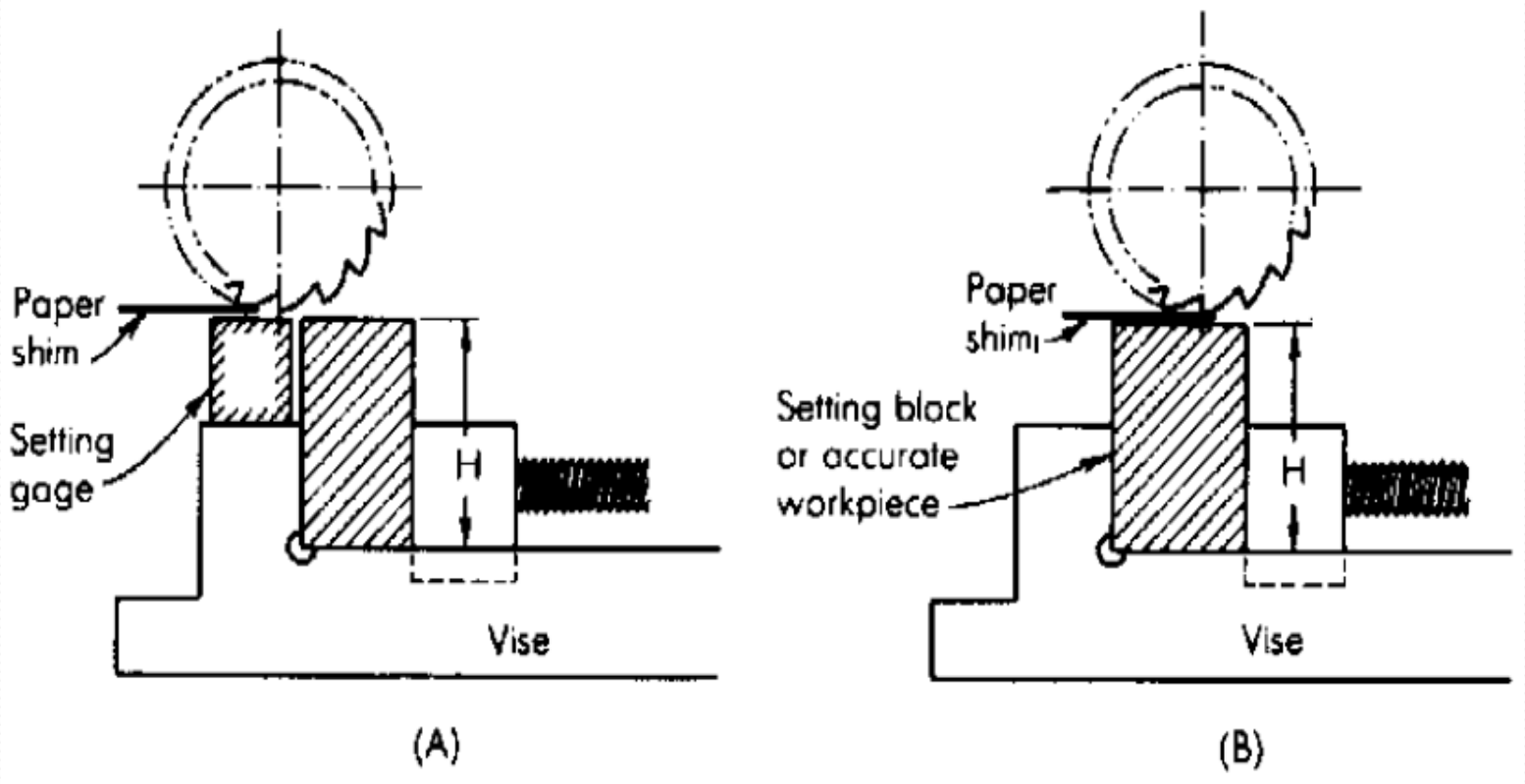

Setting block

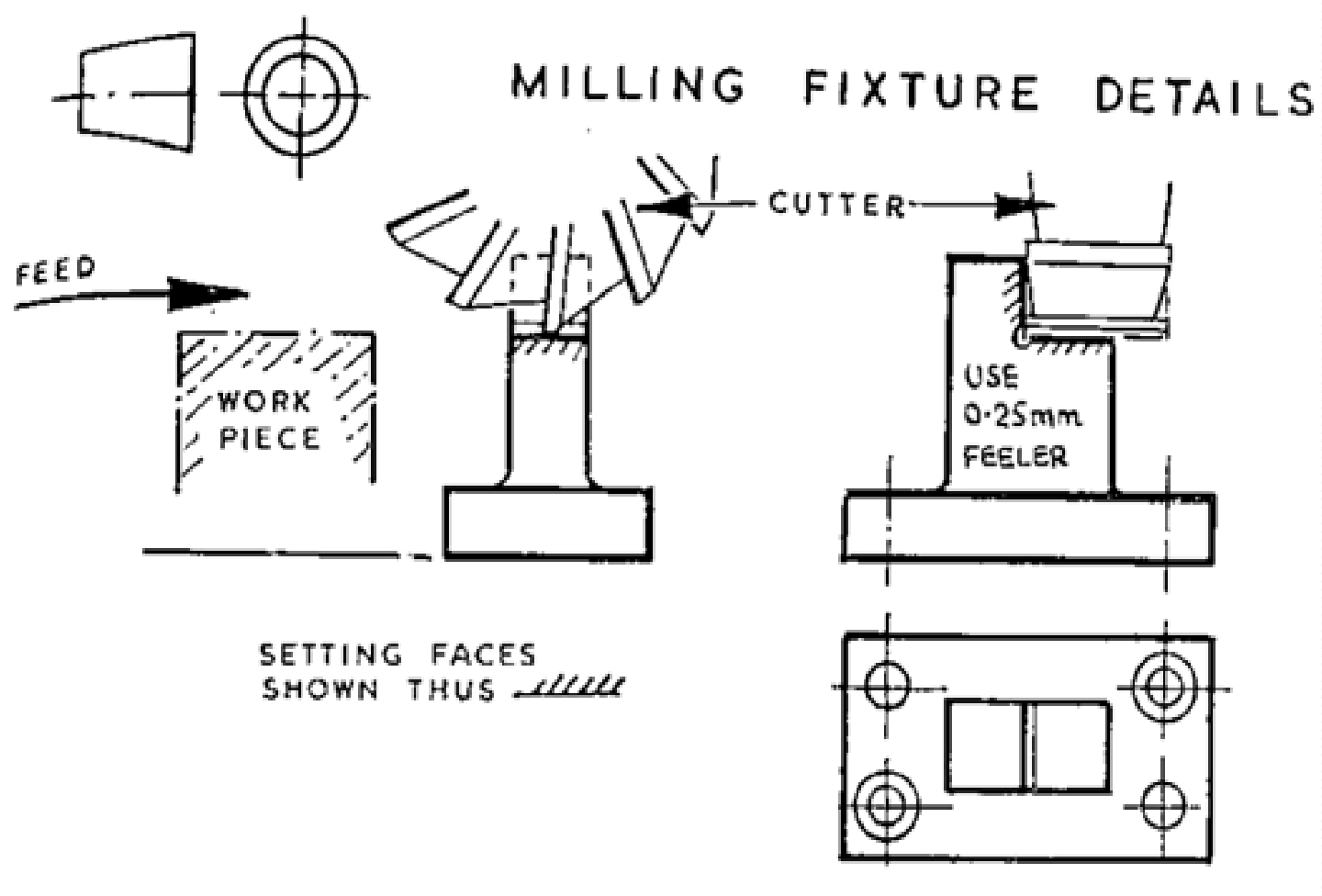

Set block for setting depth of cut

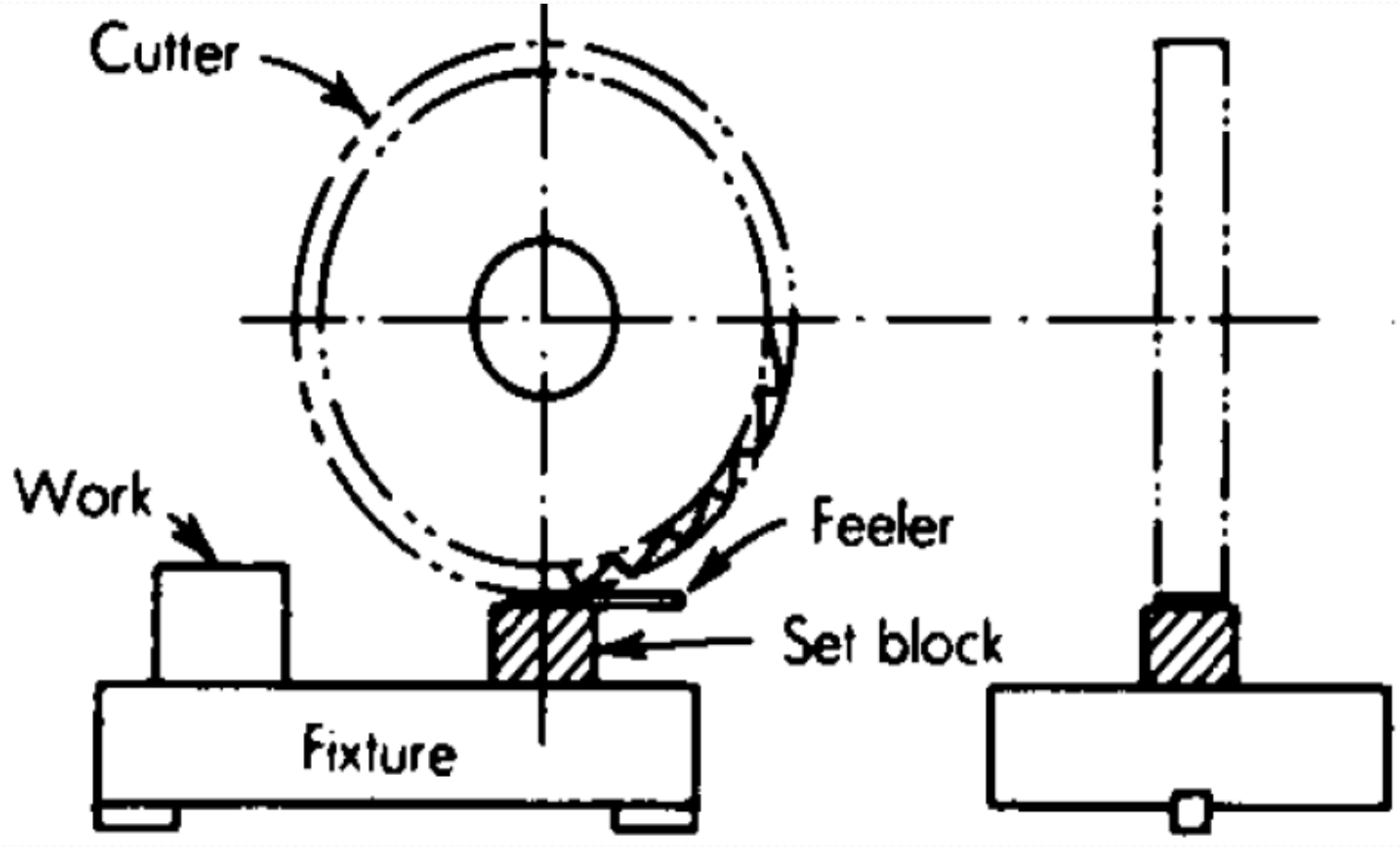

Set block for setting several depths and position of cuts

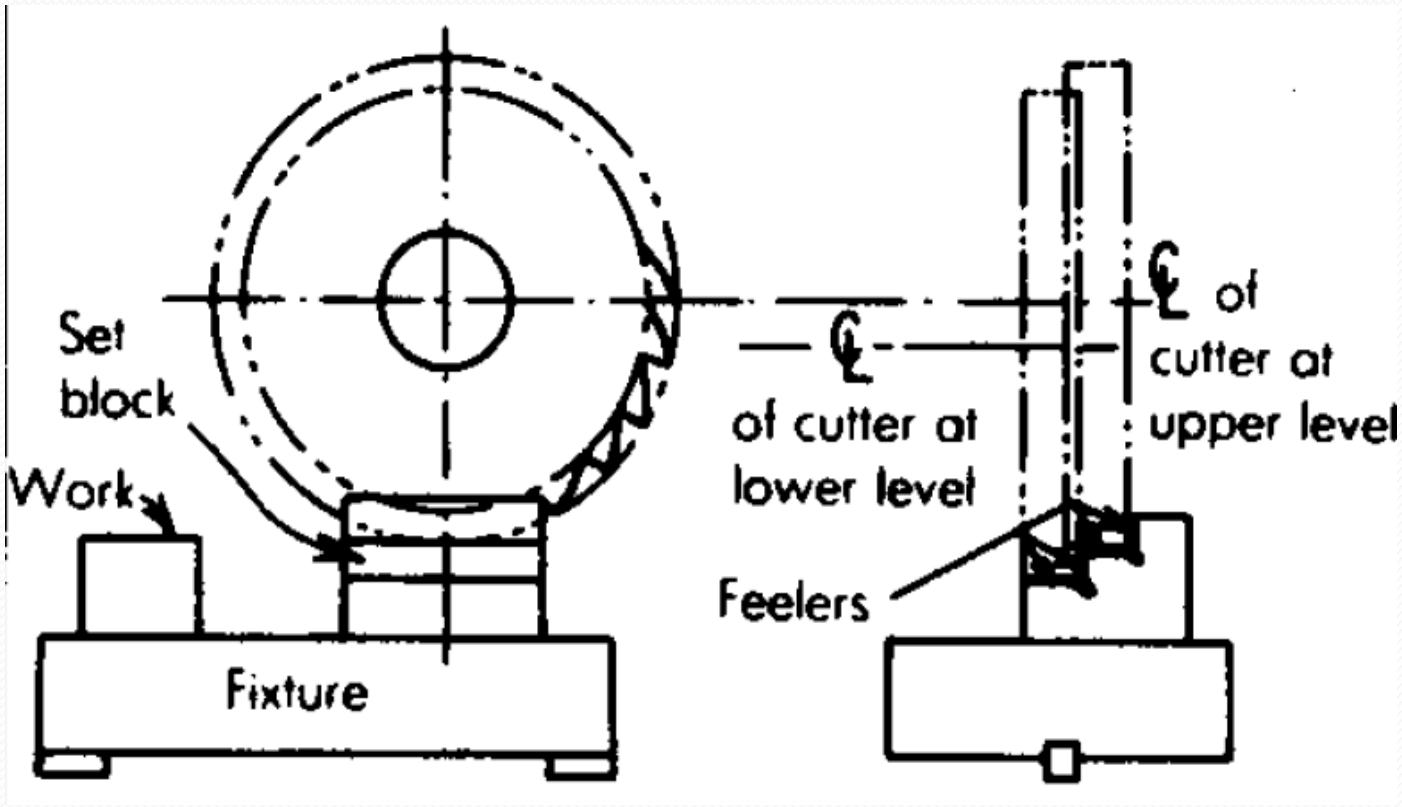

Set block for setting depth and position of cut

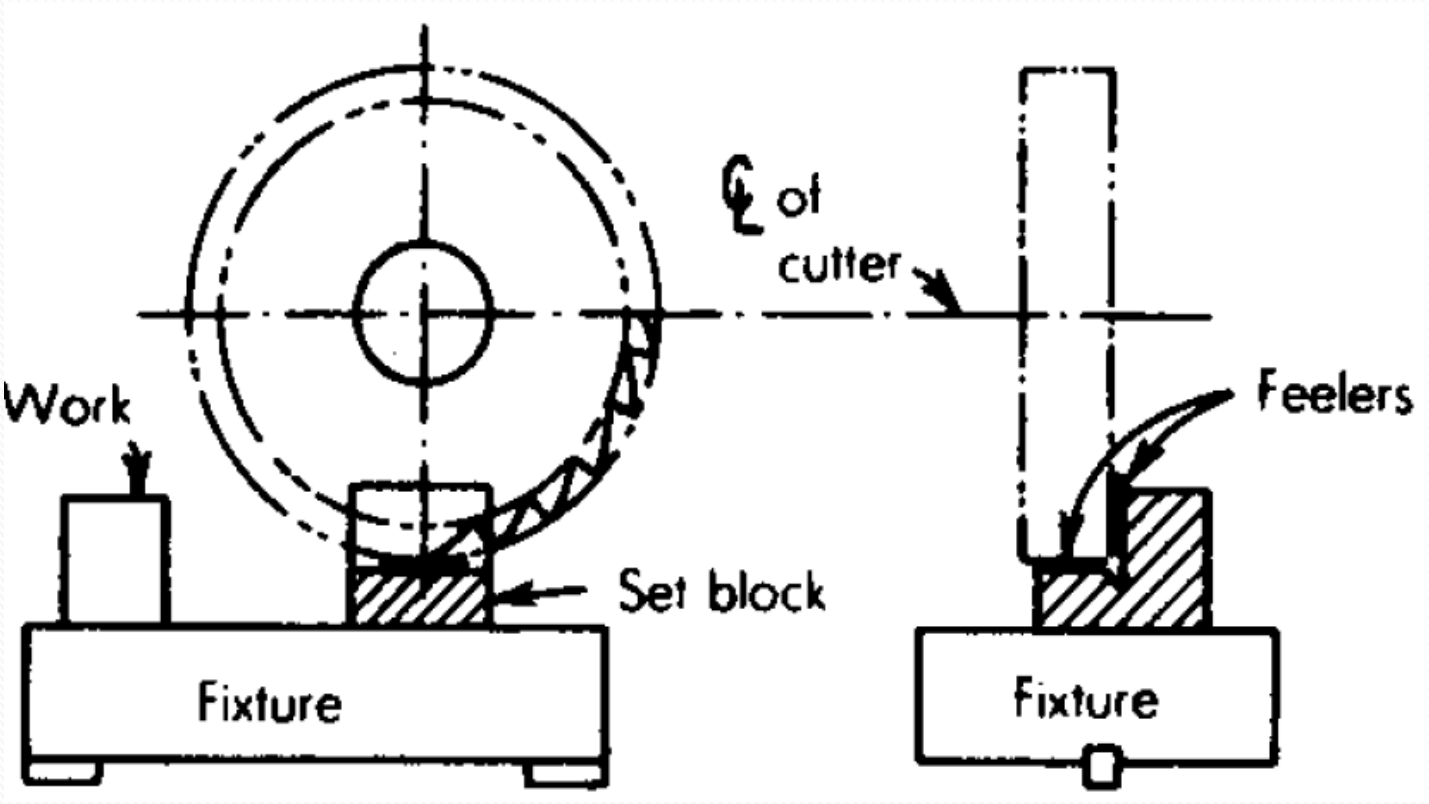

Set block for setting depths of cut on lathe fixture

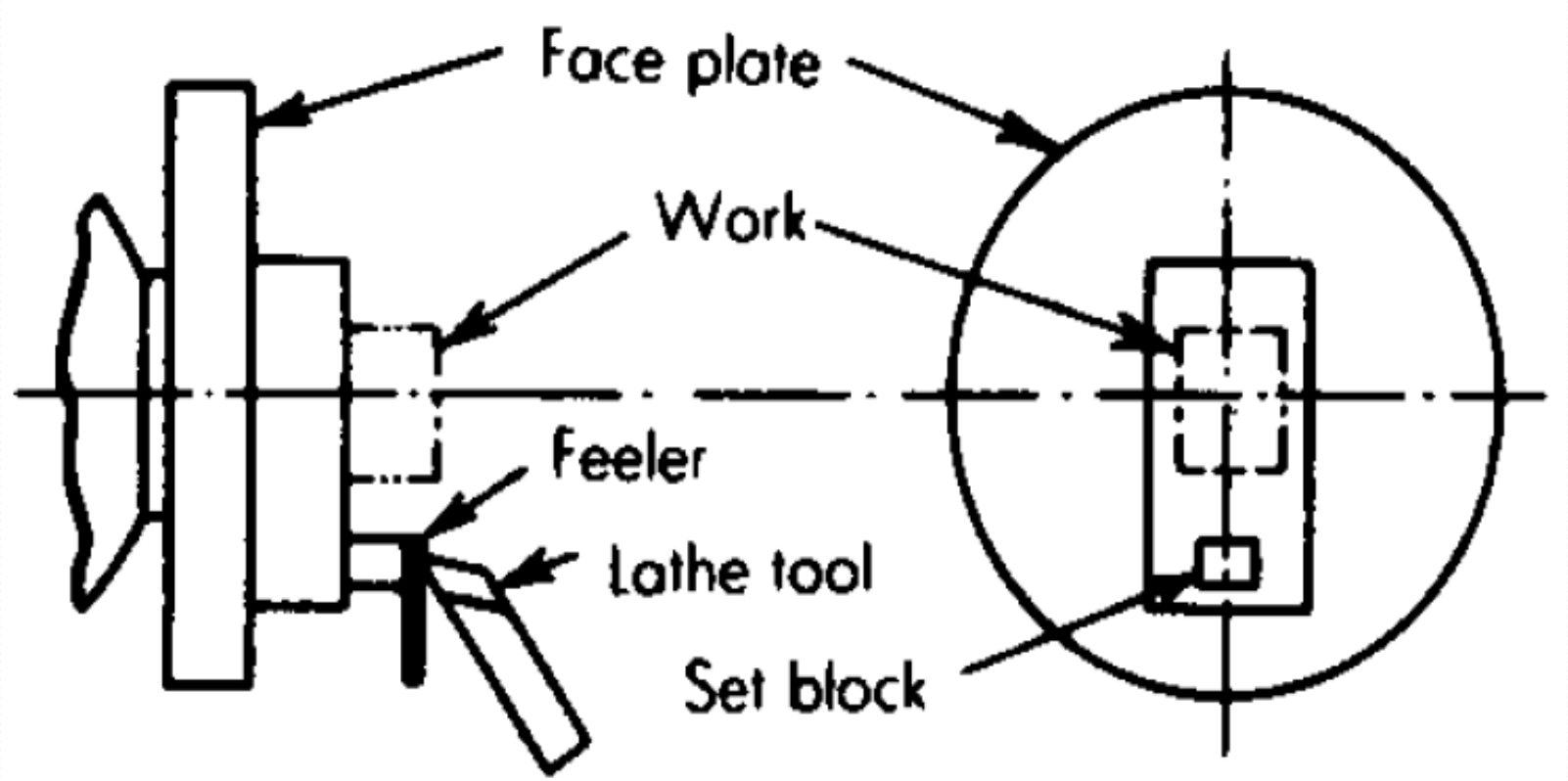

4-position set block for use with vertical mill with standard micrometer attachment

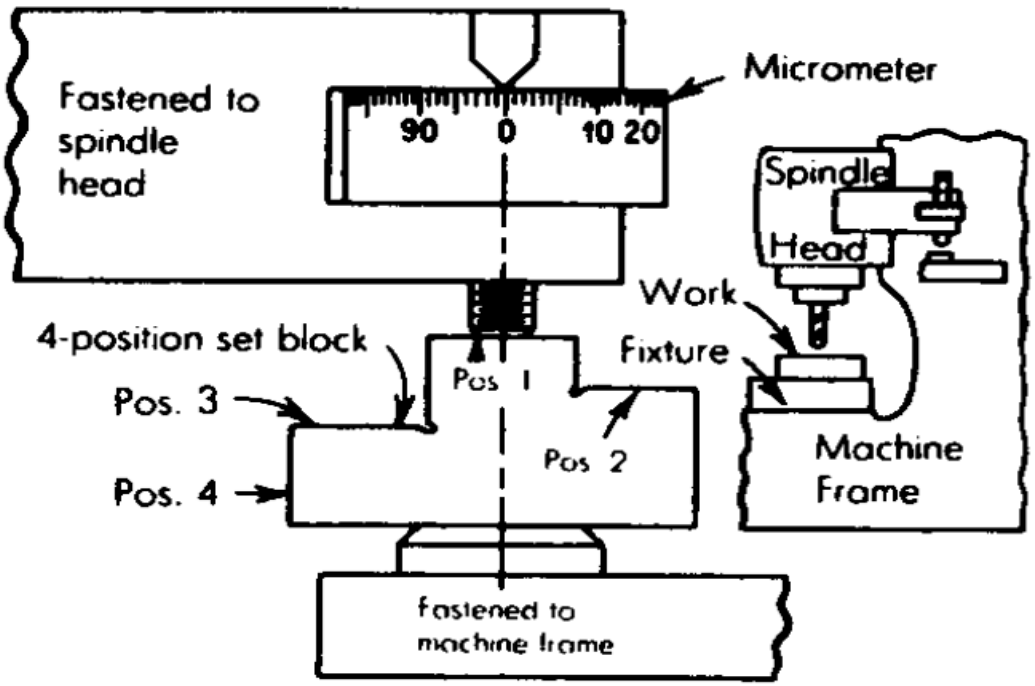

4-position set block
for use with vertical mill with standard micrometer attachment

Reversible 2-position set block

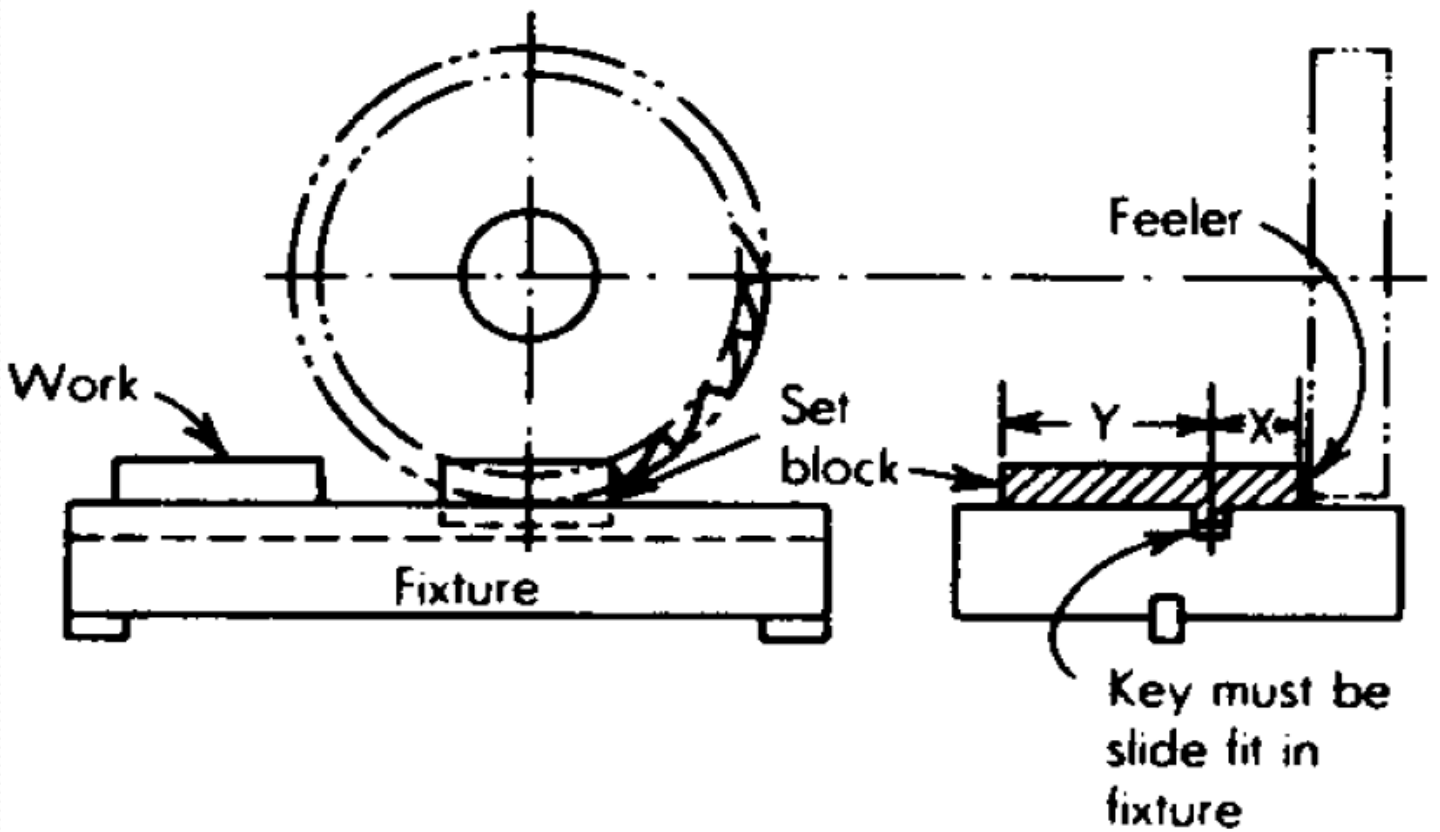

Use of setting gages to locate mill fixture in correct relationship to cutter

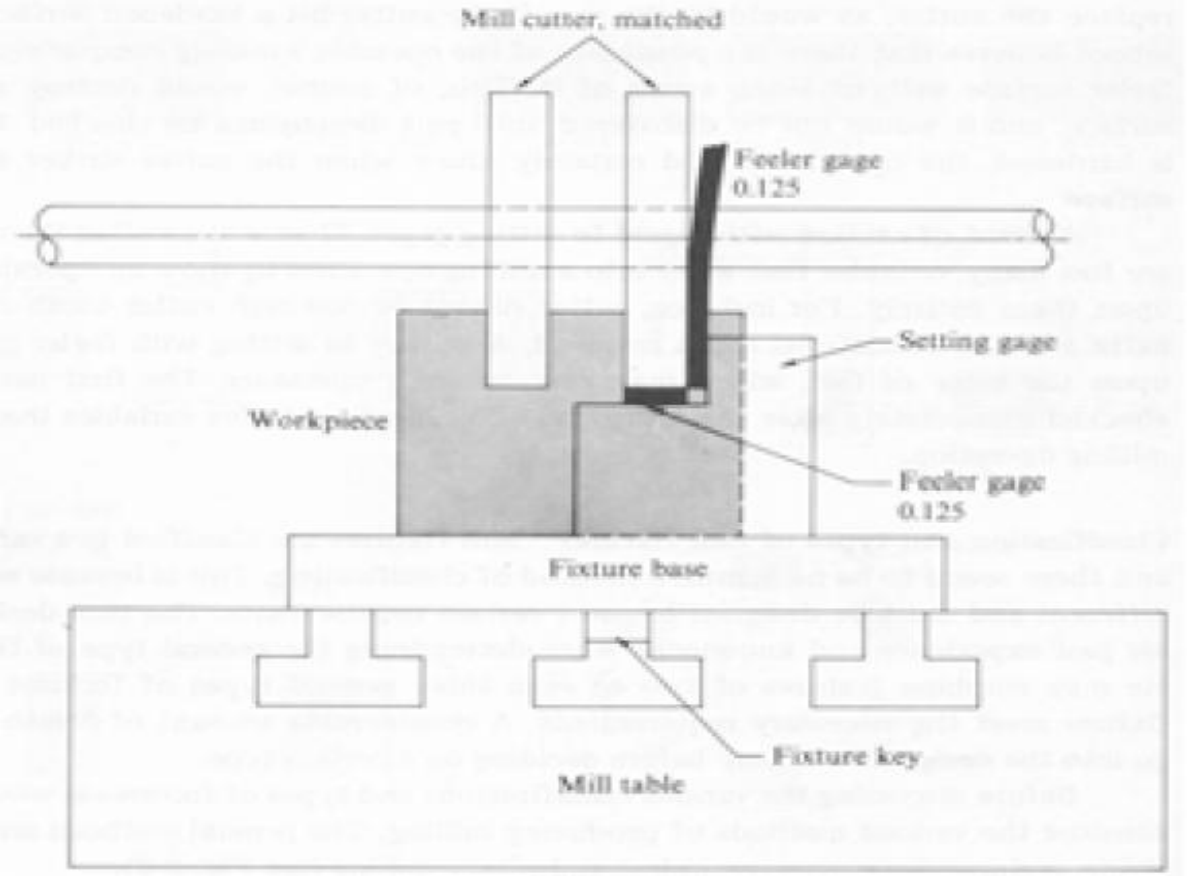

Fig. From Donaldson, and Lecain, Tool Design, McGraw Hill

Simple milling fixture

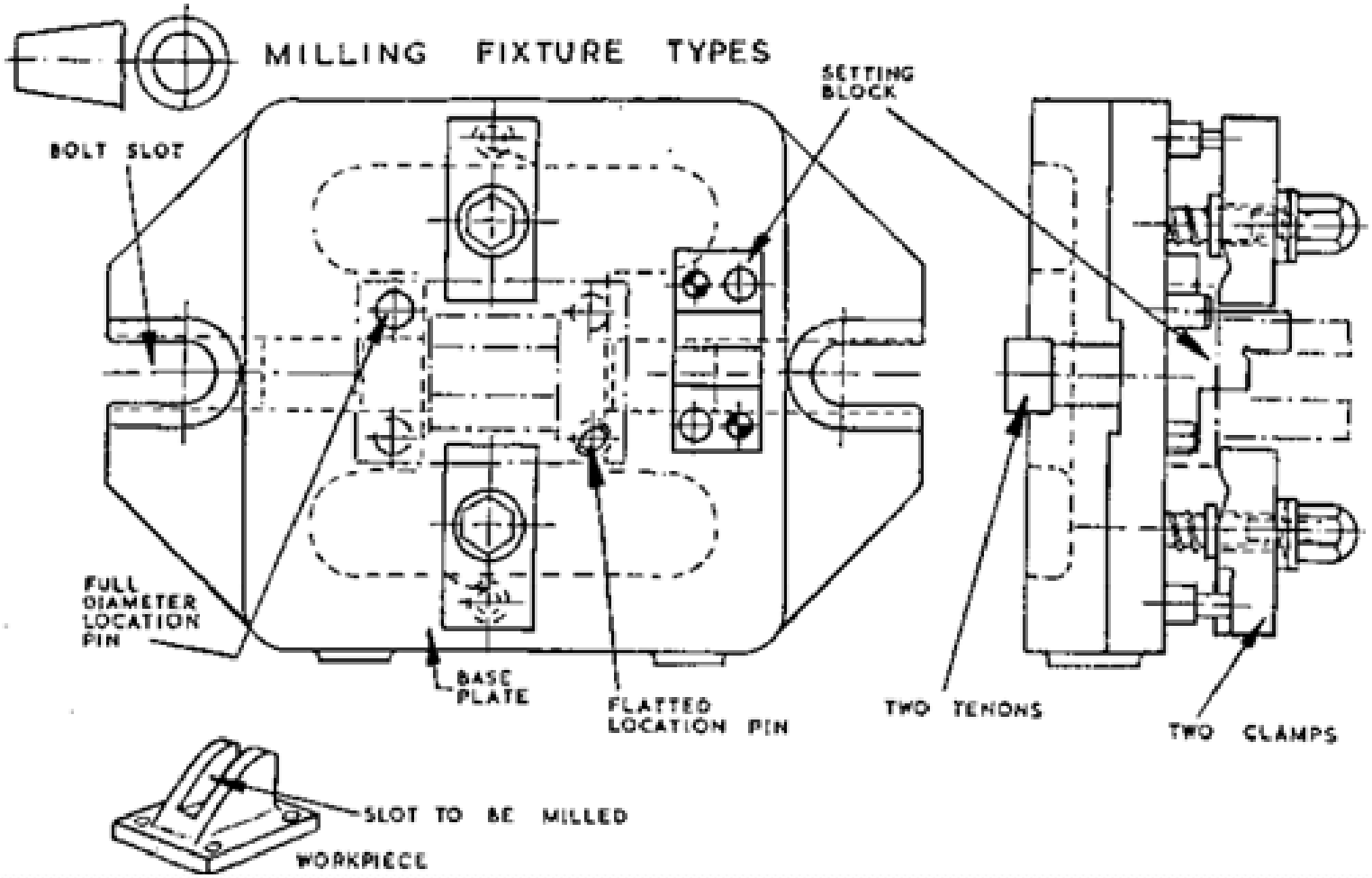

Line or string milling fixture

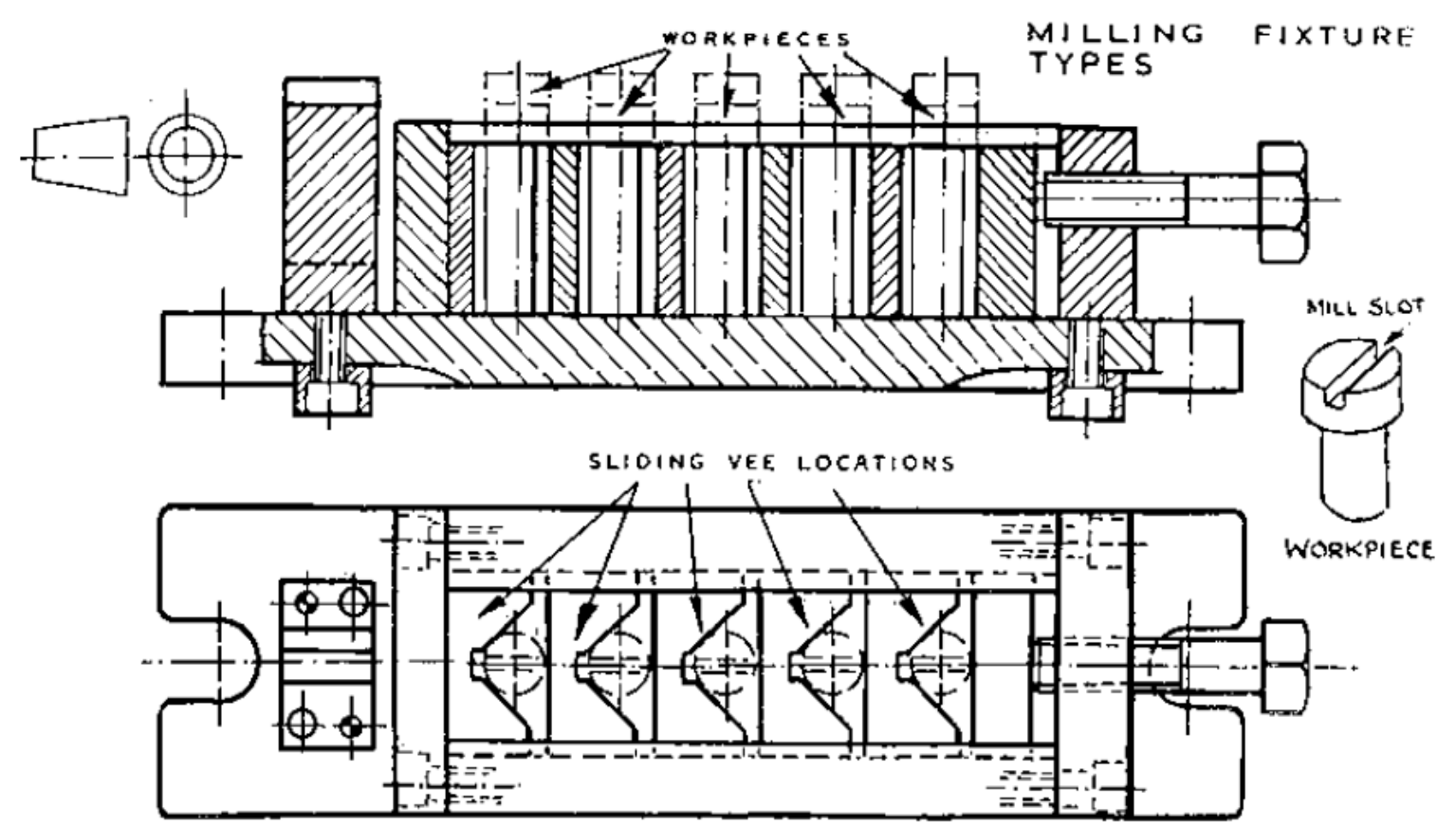

Temporary indexing fixture utilizing a circular milling table

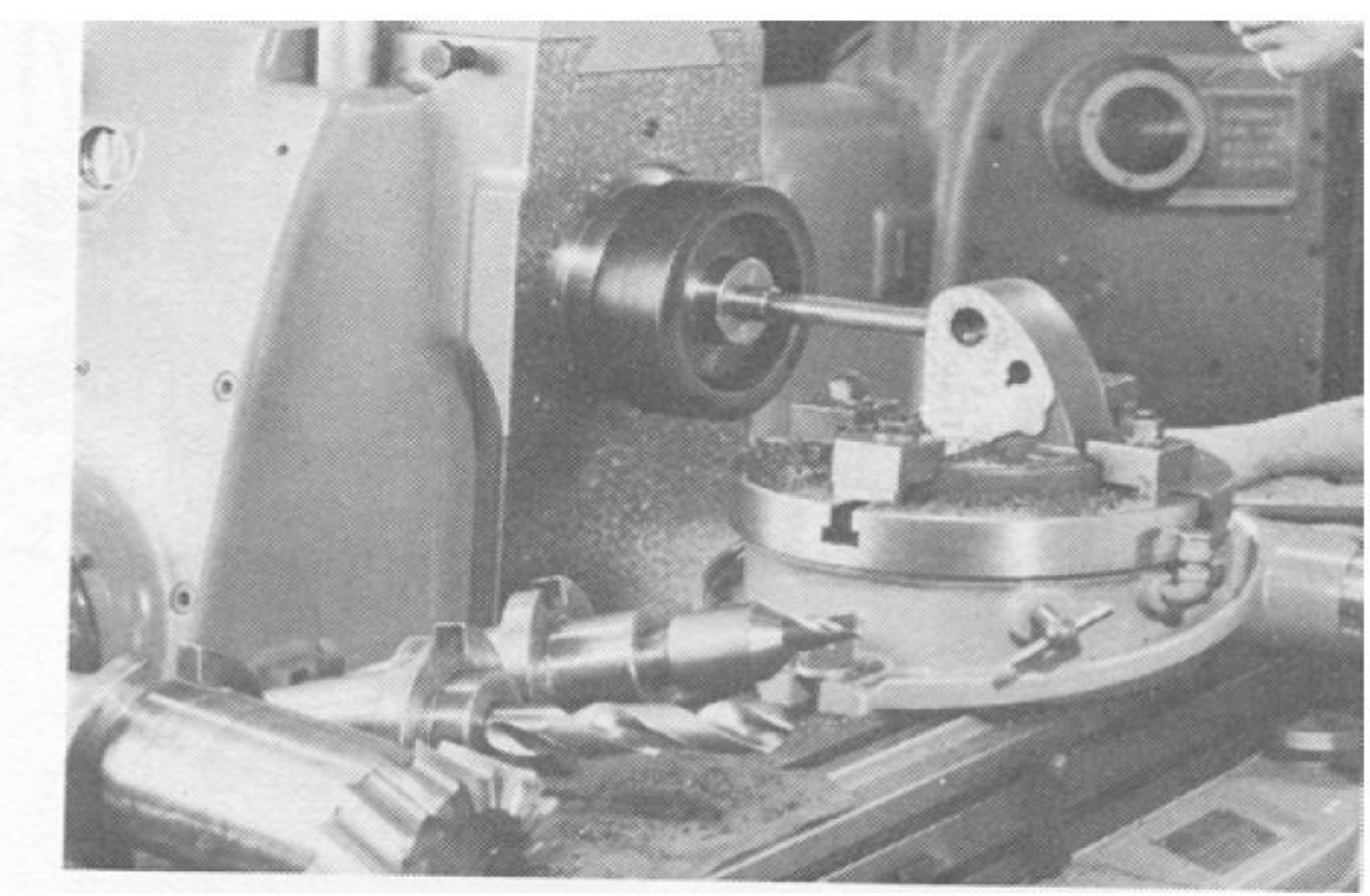

Fig. From Donaldson, and Lecain, Tool Design, McGraw Hill

Face-milling fixture showing manual clamping methods

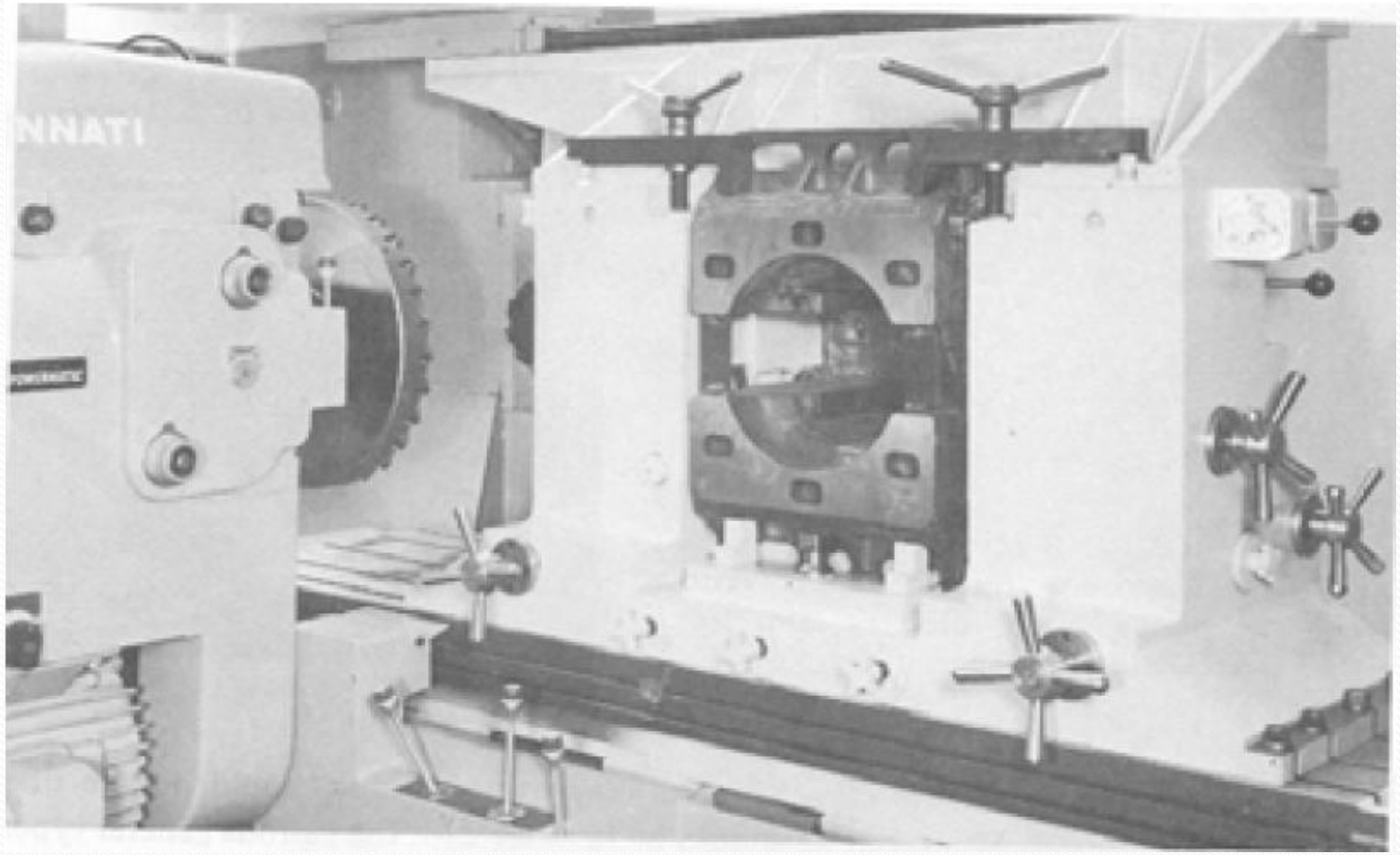

Fig. From Donaldson, and Lecain, Tool Design, McGraw Hill

Fixtured workpiece processed by several different methods

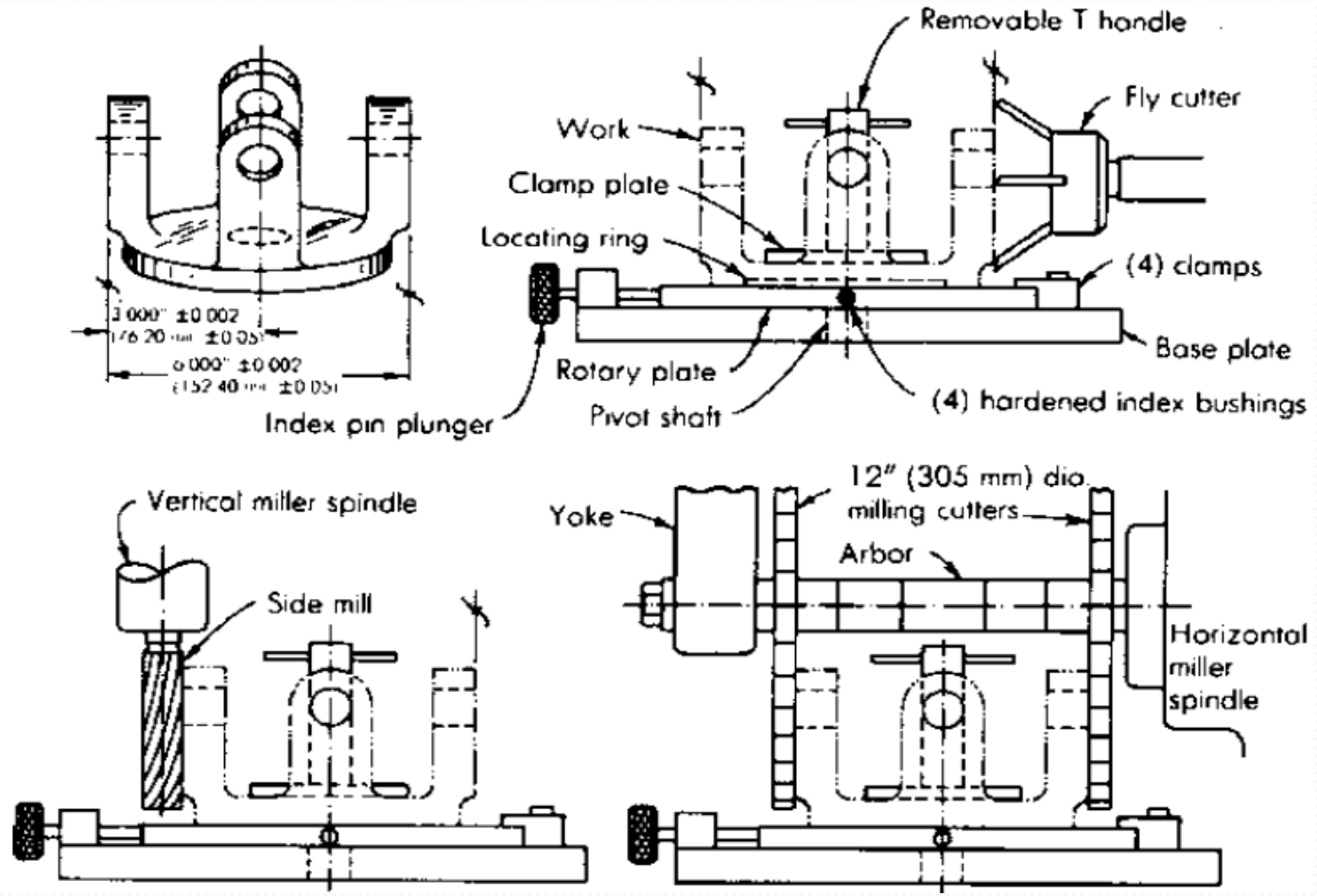

Lathe fixtures

- Similar to the design of milling fixtures.
- In milling, the workpiece is stationary and the cutting tool revolves. In turning operations, the workpiece revolves and the cutting tool is stationary.
- Tool designer must deal with-centrifugal force. The complete fixture must be designed and constructed to resist the effects of the rotational, or centrifugal, forces present in the turning.

Lathe fixtures

- Since lathe fixtures are designed to rotate, they should be as lightweight as possible.
- Lathe fixtures must be balanced. While perfect balance is not normally required for slow-speed turning operations, high rotational speeds require the fixture to be well-balanced.

Lathe fixtures

- Projections and sharp corners should be avoided since these areas will become almost invisible as the tool rotates and they could cause serious Injury.
- Parts to be fixtured should, whenever possible, be gripped by their largest diameter, or cross section.
- The part should be positioned in the fixture so that most of the machine operation can be performed in the first fixturing.

Lathe fixtures

- Clamps should be positioned on surfaces, or areas, which are rigid before and after machining.
- As with other fixtures, some means of cutter setting should also be incorporated into the design. However, since the work holder will be rotating, this setting device should be removed.

Lathe fixtures

- Whenever possible, standard lathe accessories should be adapted in the design of turning fixtures. Lathe faceplates are an ideal method to mount large fixtures. Likewise, a standard lathe chuck, or collets, can and should be modified for many fixturing applications.

Lathe fixture with swing stop

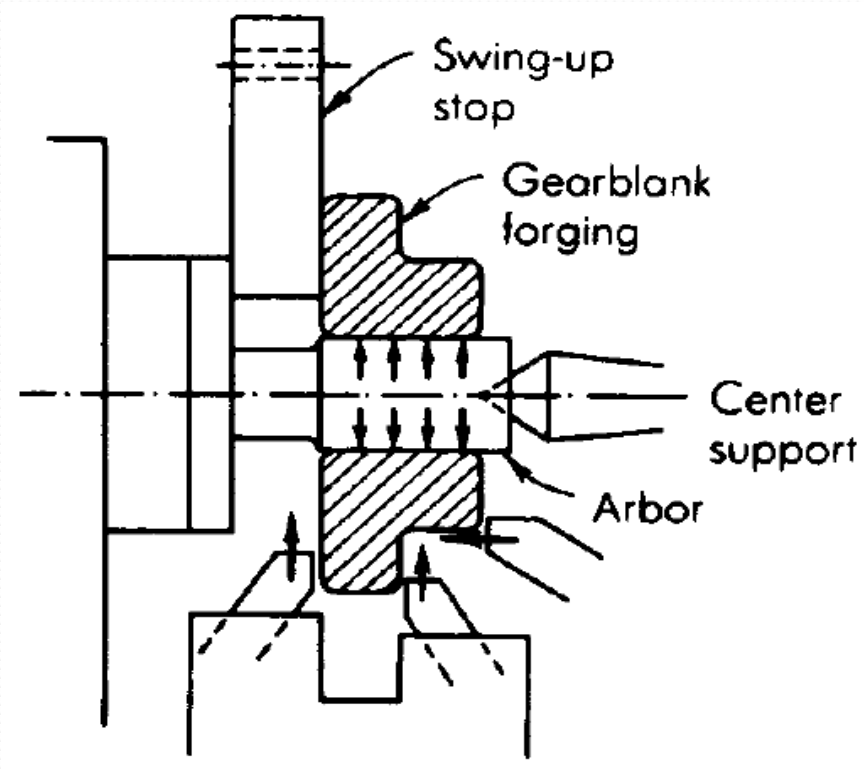

Positioning a workpiece relative to locating means

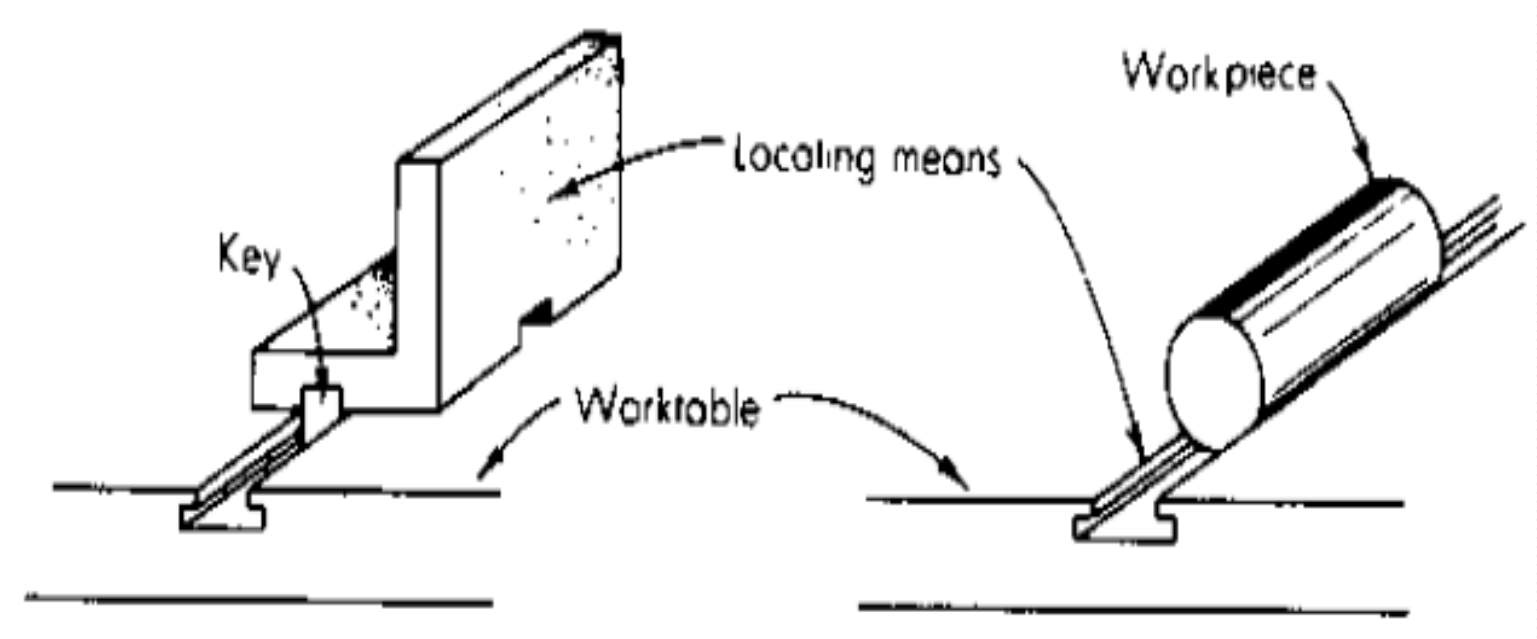

Wraparound jaws for gripping fragile or thin-walled parts

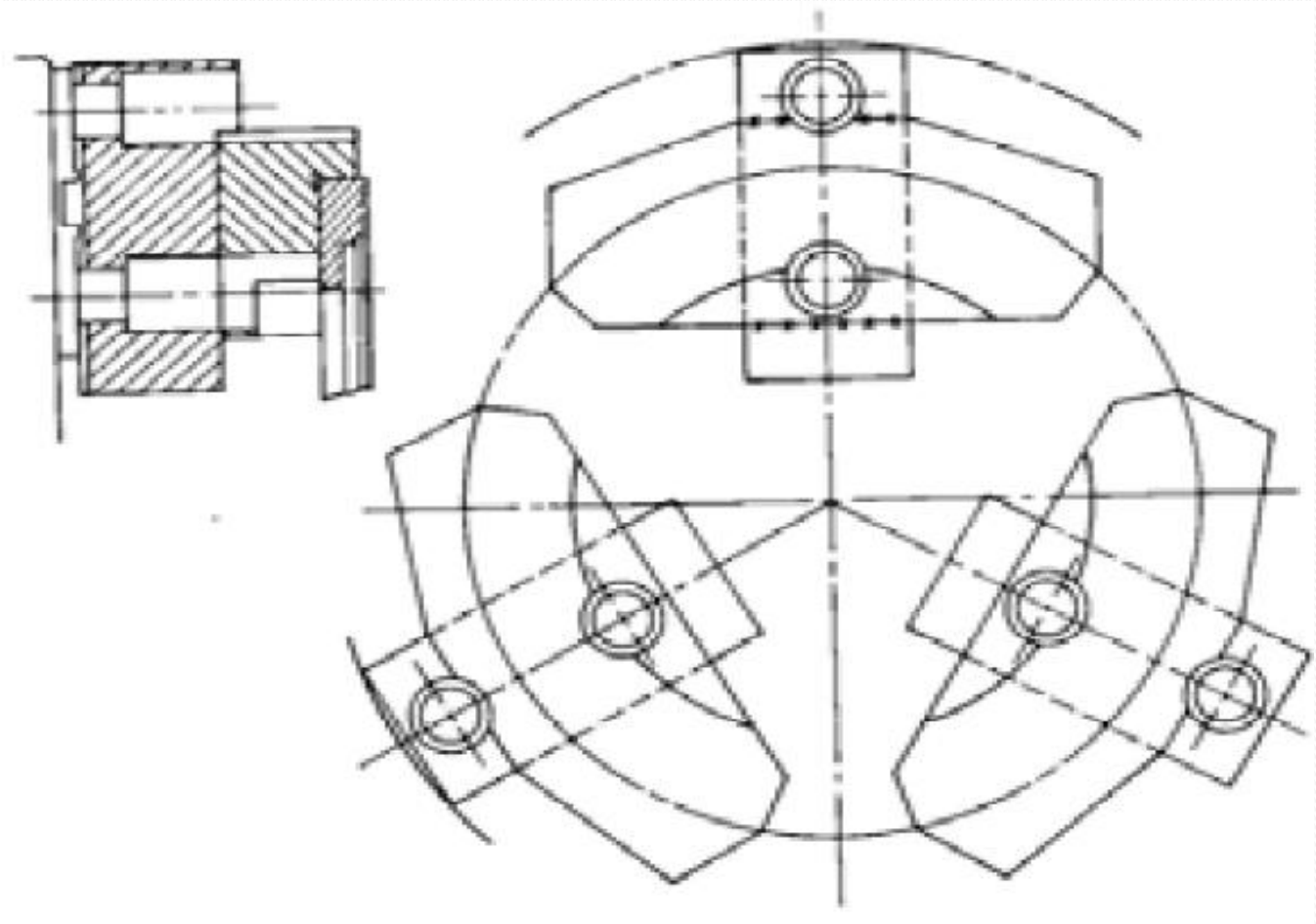

Fig. From Donaldson, and Lecain, Tool Design, McGraw Hill

Simple face plate fixture

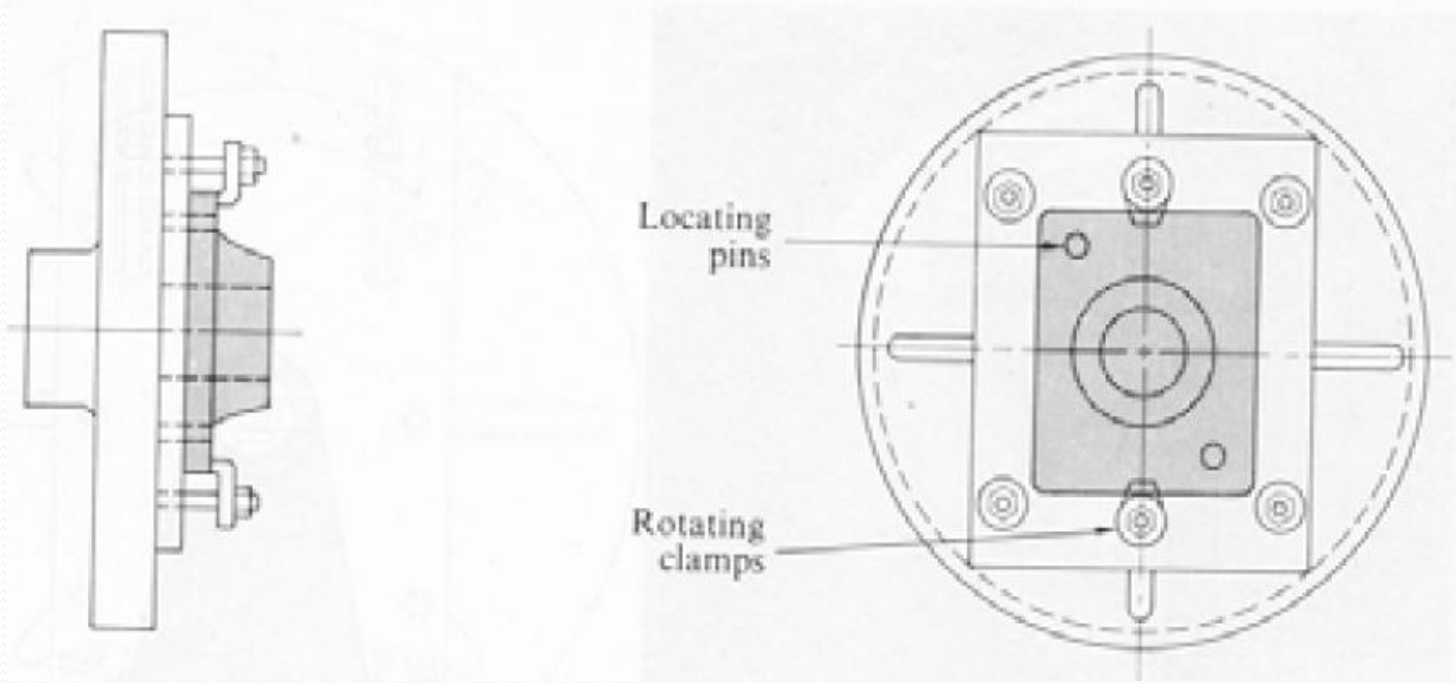

Fig. From Donaldson, and Lecain, Tool Design, McGraw Hill

Face plate fixture for in-line boring

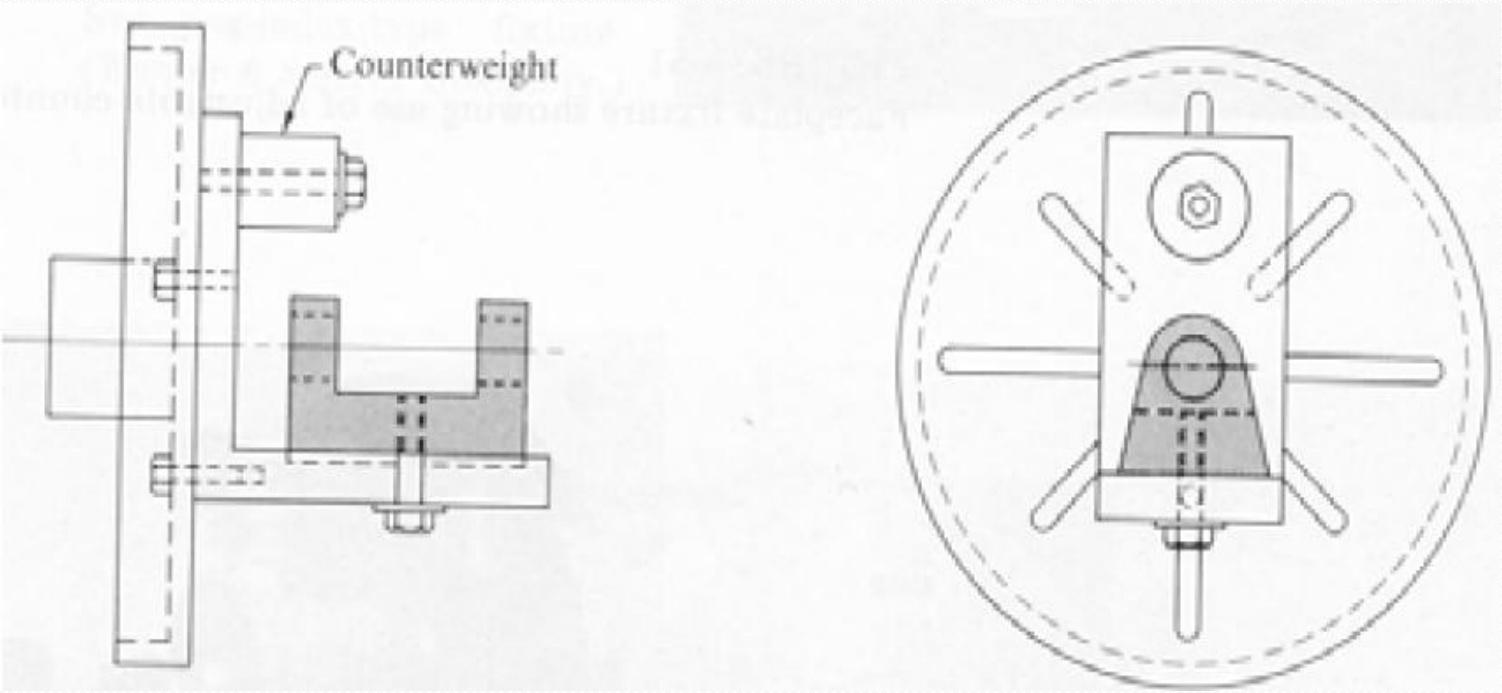

Fig. From Donaldson, and Lecain, Tool Design, McGraw Hill

Face plate fixture showing use of adjustable counterpoise

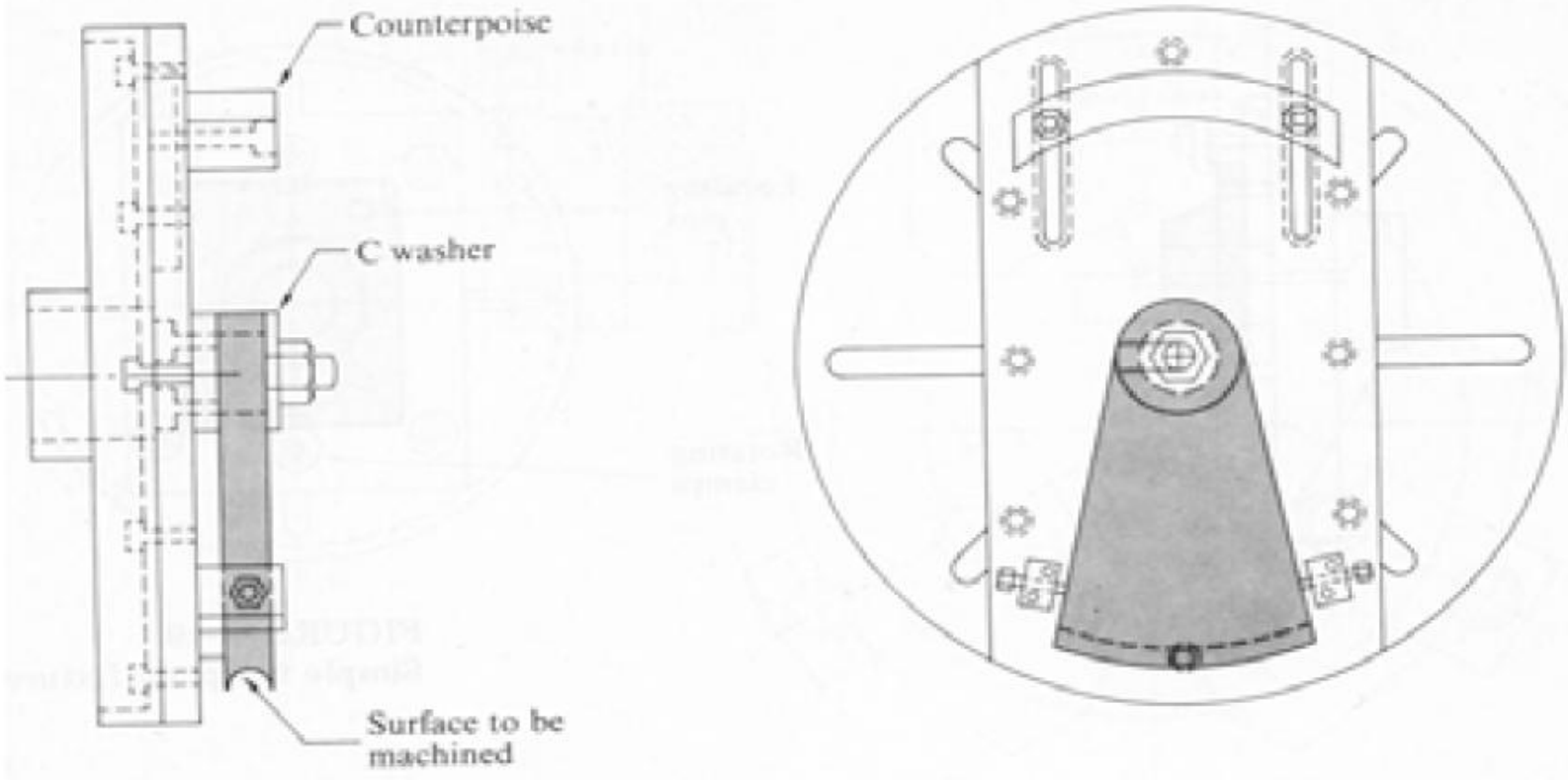

Fig. From Donaldson, and Lecain, Tool Design, McGraw Hill

Surface grinding fixtures

- Surface grinding fixtures are similar in design to milling fixtures, but made to much closer tolerances.
- Whenever practical, use magnetic chucks to hold the workpiece.
- Provide adequate room or slots to permit the escape of coolant and to allow easy removal of built-up grinding sludge.

Surface grinding fixtures

- Provide coolant containment devices or splash guards to keep the fixture from spilling coolant on the floor around the machine.
- Fixture elements which are in contact with the magnetic chuck should be made from ferrous materials.

Surface grinding fixtures

- Include provisions for rapid wheel dressing and truing in the design of the fixture, if not built into the machine.
- All locators must be accurately and positively positioned.

Boring fixtures

- These fixtures differ from boring normally used for large parts with large holes where the boring bar is rigid enough to provide additional support. A pilot bushing is not needed.
- Boring fixtures, like milling fixtures, should have some provision for setting the position of the cutting tool relative to the part.

Boring fixtures

- In cases where a boring fixture is to be used on a very large machine, such as a boring mill or vertical turret lathe it is also good practice to include areas on the fixture to insure proper alignment with the machine.

Angle type fixture

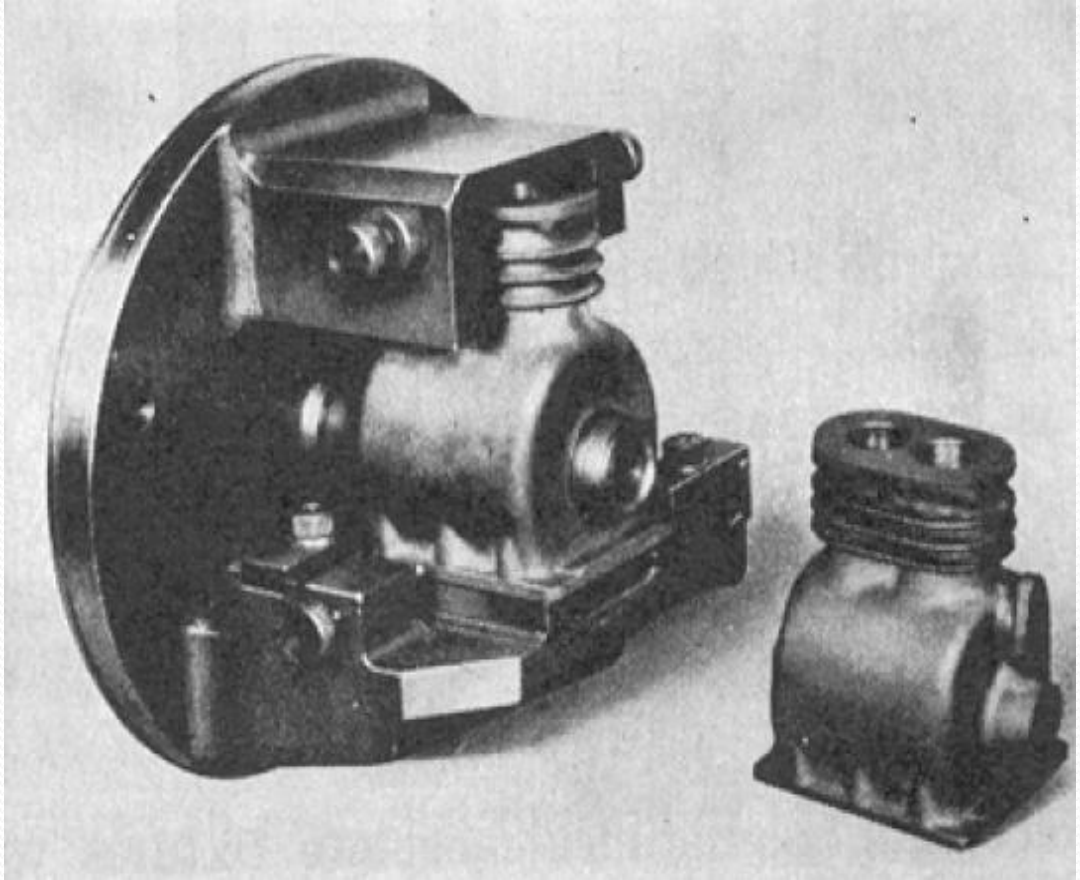

Fig. From Donaldson, and Lecain, Tool Design, McGraw Hill

External broaching fixture

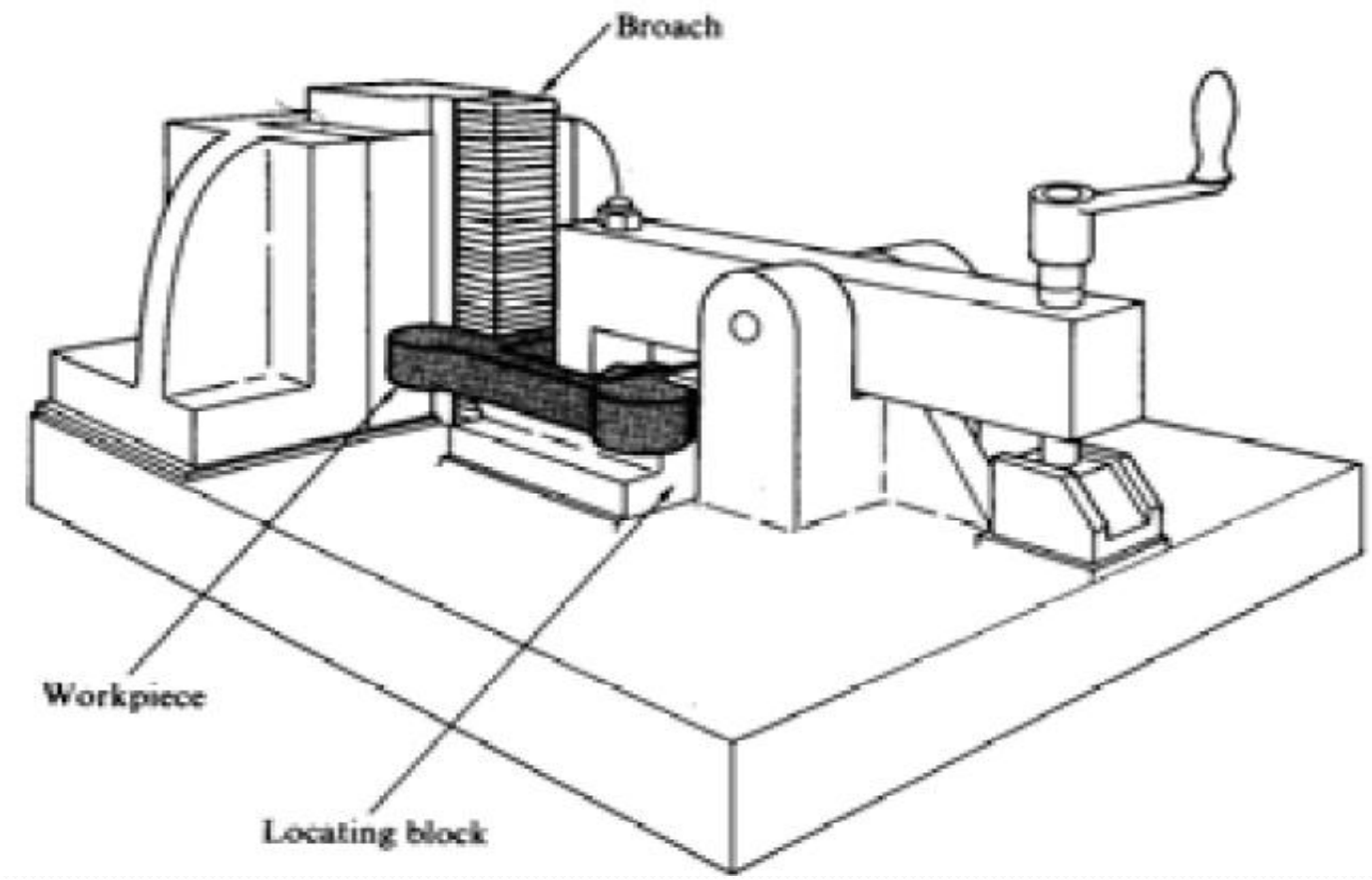

Fig. From Donaldson, and Lecain, Tool Design, McGraw Hill

Single-ram vertical-surface broaching machine with shuttle table

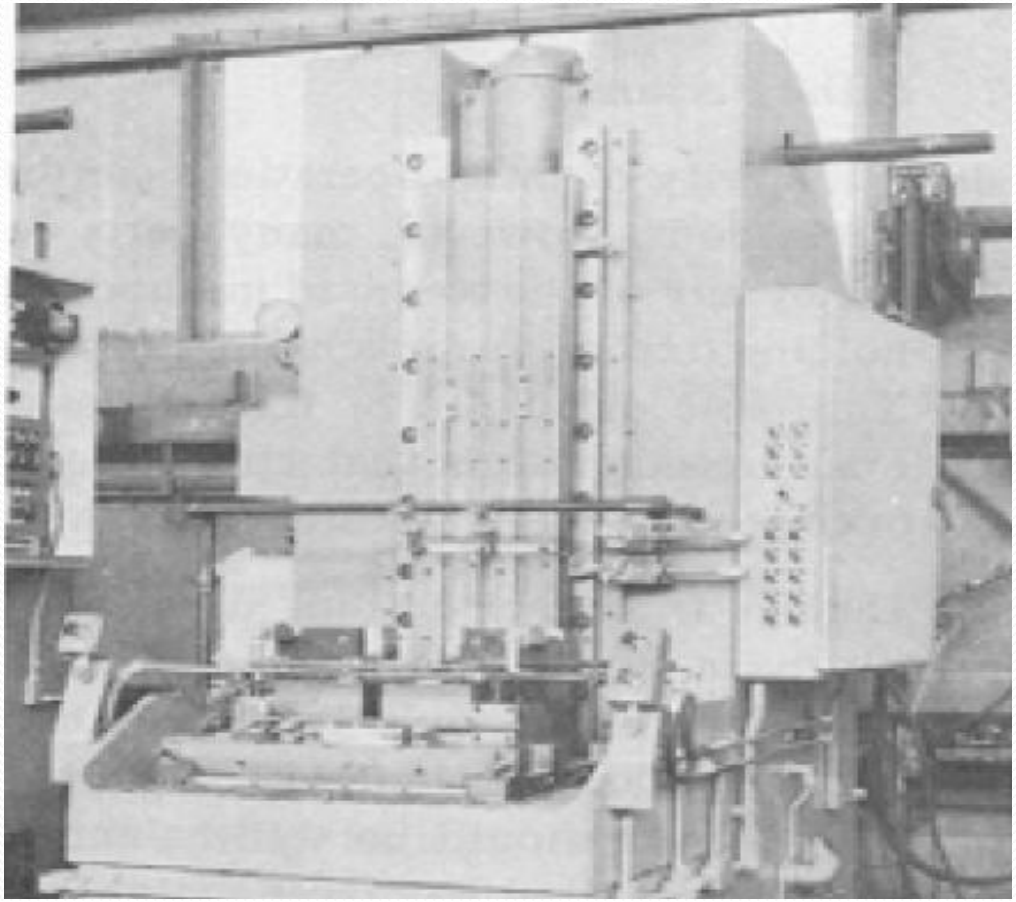

Fig. From Donaldson, and Lecain, Tool Design, McGraw Hill

References

- Fundamentals of tool design, fifth edition, Society of Manufacturing Engineers
- Donaldson, and Lecain, Tool Design, McGraw Hill

Questions?